INTERPUMP®
HYDRAULICS

Rev. 00 - 07/2009

HEAVY DUTY CYLINDERS

INTERPUMP®
HYDRAULICS

INDICE - INDEX

HEAVY DUTY

2 **IU-IUS 279**

6 **IU-IUS 249**

10 **IU-IUS 222**

14 **IU-IUS 196**

18 **IU-IUS 174**

22 **IU-IUS 154**

26 **IU-IUS 135**

30 **IU-IUS 116**

32 **IUL 174 • 154 • 135**

34 Accessori - *Accessories*

36 Complessivo - *Assembly*

37 Avvertenze - *Warnings*

HEAVY DUTY
IU 279 - IUS 279

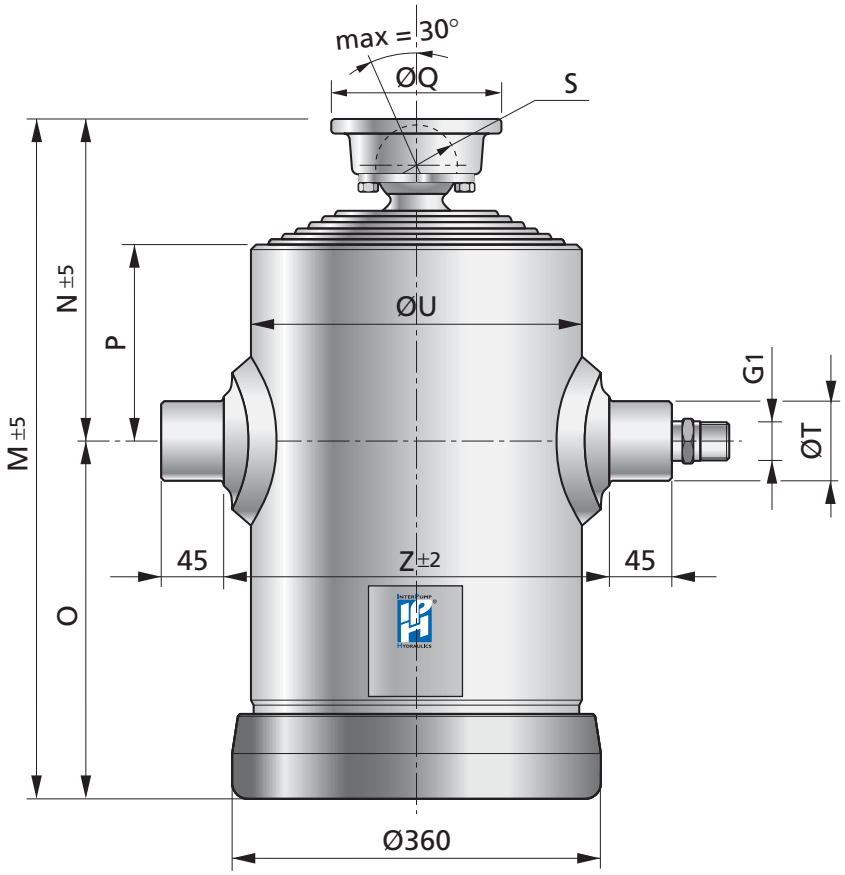

IU 279 - IUS 279

Tipo Type	Sfilate Extensions	Diametro Diameter									
		I	II	III	IV	V	VI	VII	VIII	IX	X
IU 279	10	279	249	221.5	196	174	154	135	116	98	79
	9	279	249	221.5	196	174	154	135	116	98	
	8	279	249	221.5	196	174	154	135	116		
	7	279	249	221.5	196	174	154	135			
	6	279	249	221.5	196	174	154				
IUS 279	10	279	249	221.5	196	174	154	135	120	105	90
	9	279	249	221.5	196	174	154	135	120	105	
	8	279	249	221.5	196	174	154	135	120		
	7	279	249	221.5	196	174	154	135			

ACCESSORI - ACCESSORIES

Supporto cilindro
Cylinder support

Supporto bilanciere
Cradle support

Bilanciere
Cradle

● **Vedi pagine 34 e 35 per dettagli**
See pages 34-35 for details

PULL-OUT

La quota indicata con **N** (centro mozzi/centro snodo) si intende a cilindro completamente chiuso.
Si raccomanda di prevedere un pull-out di 20-25 mm, per evitare carichi indesiderati sugli anelli interni di fermo del cilindro in condizione di pieno carico.

*Dimension marked as **N** (closed centre dimension) refers to cylinder completely closed. It is recommended to fit the cylinder with 20-25 mm pull-out more than the specified **N** dimension, in order to avoid unwanted loads on internal steel stop rings when tipper body is fully loaded.*

DETTAGLI TECNICI - TECHNICAL DATA

Codice Code	Modello Model	Corsa Utile Power Stroke (mm)	N° Sfili Extensions N°	Peso Weight (Kg)	Consumo Olio Oil Consumption (dm^3)	Mas. Tot Ribaltabile Total Mass Tip-Up (ton)	M	N	O	P	Q	S	T	U	Z
							(mm)								
N1163527001	IU 279 6360 10	6354	10	410	163.7	30	923	275	648	140	150	73	70	316	360
N1157127901	IU 279 5720 9	5717	9	403	160.6	35	916	268	648	140	150	73	70	316	360
N1150827801	IU 279 5080 8	5080	8	393	155.8	40	937	289	648	140	170	92	70	316	360
N1144427701	IU 279 4450 7	4445	7	380	149.1	46	930	282	648	140	170	92	70	316	360
N1138127601	IU 279 3810 6	3810	6	369	140.0	52	925	277	648	140	170	92	70	316	360
N1155527001	IU 279 5560 10	5554	10	364	143.1	30	843	275	568	140	150	73	70	316	360
N1149927901	IU 279 5000 9	4997	9	358	140.3	35	836	268	568	140	150	73	70	316	360
N1144427801	IU 279 4440 8	4440	8	352	136.1	40	857	289	568	140	170	92	70	316	360
N1138827701	IU 279 3890 7	3885	7	344	130.3	46	850	282	568	140	170	92	70	316	360
N1133327601	IU 279 3330 6	3330	6	334	122.3	52	845	277	568	140	170	92	70	316	360
N1245527001	IUS 279 4560 10	4552	10	316	117.9	32	738	253	485	118	150	73	70	316	360
N1240827901	IUS 279 4090 9	4087	9	313	114.9	36	731	246	485	118	150	73	70	316	360
N1236227801	IUS 279 3630 8	3624	8	312	110.9	41	744	259	485	118	170	92	70	316	360
N1231627701	IUS 279 3160 7	3160	7	307	105.7	54	745	260	485	118	170	92	70	316	360
N1238527001	IUS 279 3860 10	3852	10	284	99.6	37	668	253	415	118	150	73	70	316	360
N1234527901	IUS 279 3460 9	3457	9	281	97.1	42	661	246	415	118	150	73	70	316	360
N1230627801	IUS 279 3070 8	3064	8	281	93.7	47	674	259	415	118	170	92	70	316	360
N1226727701	IUS 279 2670 7	2670	7	277	89.2	54	675	260	415	118	170	92	70	316	360
N1236027001	IUS 279 3610 10	3602	10	273	93.0	37	643	253	390	118	150	73	70	316	360
N1232327901	IUS 279 3240 9	3232	9	270	90.7	42	636	246	390	118	150	73	70	316	360
N1228627801	IUS 279 2870 8	2864	8	270	87.5	47	649	259	390	118	170	92	70	316	360
N1224927701	IUS 279 2500 7	2495	7	266	83.3	54	650	260	390	118	170	92	70	316	360
N1230527001	IUS 279 3060 10	3052	10	247	78.7	37	587	252	335	118	150	73	70	316	360
N1227327901	IUS 279 2740 9	2737	9	245	76.7	42	580	245	335	118	150	73	70	316	360
N1224227801	IUS 279 2430 8	2424	8	246	73.9	47	593	258	335	118	170	92	70	316	360
N1221127701	IUS 279 2110 7	2110	7	243	70.4	54	594	259	335	118	170	92	70	316	360
N1228427001	IUS 279 2850 10	2849	10	238	73.3	37	567	252	315	118	150	73	70	316	360
N1225527901	IUS 279 2560 9	2554	9	236	71.5	42	560	245	315	118	150	73	70	316	360
N1222627801	IUS 279 2270 8	2261	8	237	68.9	47	573	258	315	118	170	92	70	316	360
N1219627701	IUS 279 1970 7	1967	7	234	65.6	54	574	259	315	118	170	92	70	316	360
Max pressure = 150 bar															

HEAVY DUTY
IU 279 - IUS 279

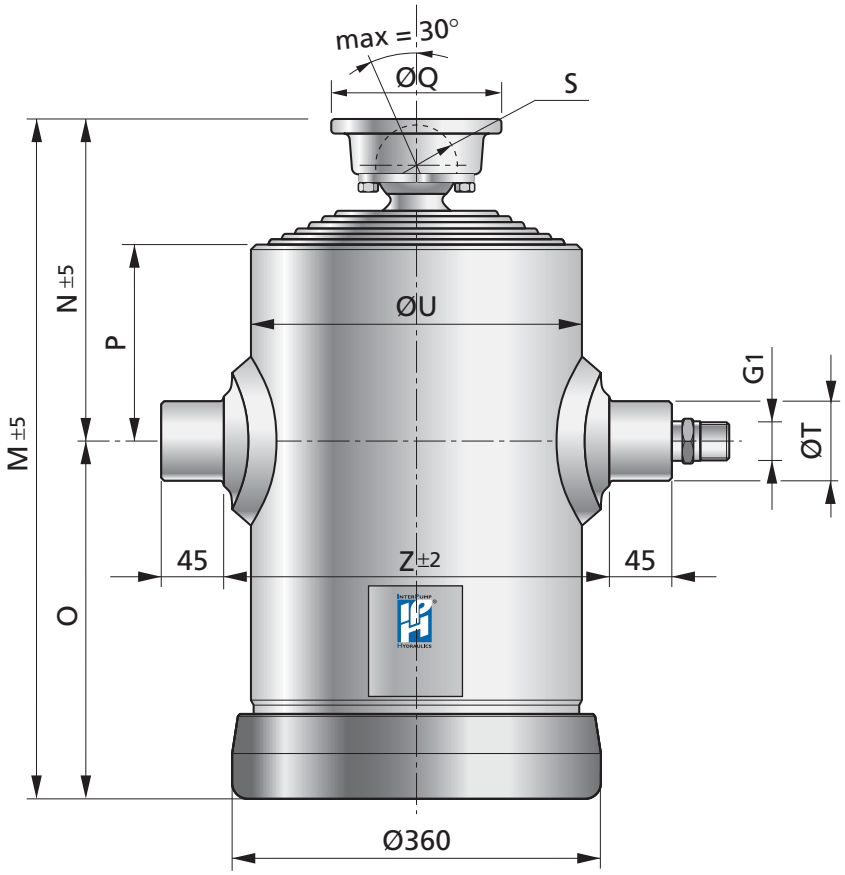

IU 279 - IUS 279

Tipo Type	Sfilate Extensions	Diametro Diameter									
		I	II	III	IV	V	VI	VII	VIII	IX	X
IU 279	10	279	249	221.5	196	174	154	135	116	98	79
	9	279	249	221.5	196	174	154	135	116	98	
	8	279	249	221.5	196	174	154	135	116		
	7	279	249	221.5	196	174	154	135			
	6	279	249	221.5	196	174	154				
IUS 279	10	279	249	221.5	196	174	154	135	120	105	90
	9	279	249	221.5	196	174	154	135	120	105	
	8	279	249	221.5	196	174	154	135	120		
	7	279	249	221.5	196	174	154	135			

ACCESSORI - ACCESSORIES

Supporto cilindro
Cylinder support

Supporto bilanciere
Cradle support

Bilanciere
Cradle

● **Vedi pagine 34 e 35 per dettagli**
See pages 34-35 for details

PULL-OUT

La quota indicata con **N** (centro mozzi/centro snodo) si intende a cilindro completamente chiuso.
Si raccomanda di prevedere un pull-out di 20-25 mm, per evitare carichi indesiderati sugli anelli interni di fermo del cilindro in condizione di pieno carico.

*Dimension marked as **N** (closed centre dimension) refers to cylinder completely closed. It is recommended to fit the cylinder with 20-25 mm pull-out more than the specified **N** dimension, in order to avoid unwanted loads on internal steel stop rings when tipper body is fully loaded.*

DETTAGLI TECNICI - TECHNICAL DATA

Codice Code	Modello Model	Corsa Utile Power Stroke (mm)	N° Sfili Extensions N°	Peso Weight (Kg)	Consumo Olio Oil Consumption (dm^3)	Mas. Tot Ribaltabile Total Mass Tip-Up (ton)	M	N	O	P	Q	S	T	U	Z
							(mm)								
N1224927001	IUS 279 2500 10	2499	10	220	65.9	37	498	223	275	128	150	73	70	316	360
N1222627901	IUS 279 2260 9	2260	9	218	64.4	42	496	221	275	128	150	73	70	316	360
N1220127801	IUS 279 2020 8	2018	8	220	62.3	47	514	239	275	128	170	92	70	316	360
N1217727701	IUS 279 1770 7	1770	7	218	59.5	54	520	245	275	128	170	92	70	316	360
N1221527001	IUS 279 2160 10	2157	10	204	57.2	37	459	234	225	145	150	73	70	316	360
N1219527901	IUS 279 1960 9	1957	9	203	55.9	42	459	234	225	145	150	73	70	316	360
N1217527801	IUS 279 1760 8	1752	8	205	54.1	47	479	254	225	145	170	92	70	316	360
N1215327701	IUS 279 1540 7	1539	7	203	51.7	54	487	262	225	145	170	92	70	316	360
N1218727001	IUS 279 1880 10	1871	10	190	49.2	37	426	202	224	118	150	73	70	316	360
N1216927901	IUS 279 1700 9	1691	9	189	48.0	42	426	202	224	118	150	73	70	316	360
N1215027801	IUS 279 1510 8	1506	8	191	46.4	47	446	222	224	118	170	92	70	316	360
N1213127701	IUS 279 1320 7	1313	7	189	44.2	54	454	230	224	118	170	92	70	316	360
Max pressure = 150 bar															

HEAVY DUTY
IU 249 - IUS 249

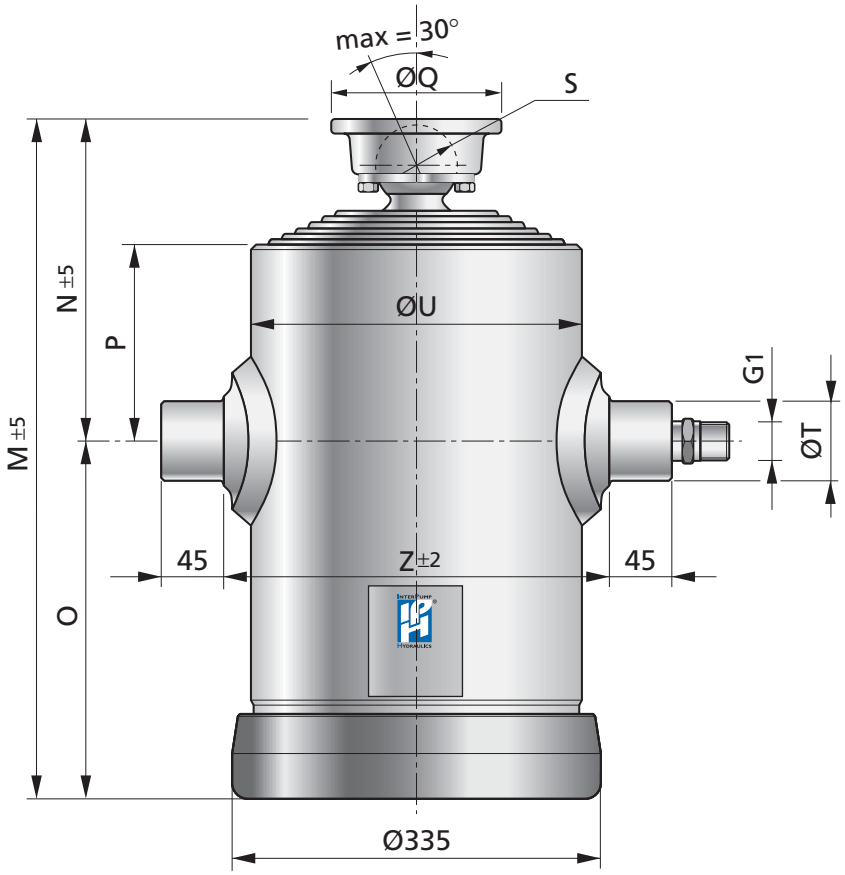

IU 249 - IUS 249

Tipo Type	Sfilate Extensions	Diametro Diameter									
		I	II	III	IV	V	VI	VII	VIII	IX	X
IU 249	10	249	221,5	196	174	154	135	116	98	79	61
	9	249	221,5	196	174	154	135	116	98	79	
	8	249	221,5	196	174	154	135	116	98		
	7	249	221,5	196	174	154	135	116			
	6	249	221,5	196	174	154	135				
IUS 249	10	249	221,5	196	174	154	135	120	105	90	75
	9	249	221,5	196	174	154	135	120	105	90	
	8	249	221,5	196	174	154	135	120	105		
	7	249	221,5	196	174	154	135	120			
	6	249	221,5	196	174	154	135				

ACCESSORI - ACCESSORIES

Supporto cilindro
Cylinder support

Supporto bilanciere
Cradle support

Bilanciere
Cradle

● **Vedi pagine 34 e 35 per dettagli**
See pages 34-35 for details

PULL-OUT

La quota indicata con **N** (centro mozzi/centro snodo) si intende a cilindro completamente chiuso.
Si raccomanda di prevedere un pull-out di 20-25 mm, per evitare carichi indesiderati sugli anelli interni di fermo del cilindro in condizione di pieno carico.

*Dimension marked as **N** (closed centre dimension) refers to cylinder completely closed. It is recommended to fit the cylinder with 20-25 mm pull-out more than the specified **N** dimension, in order to avoid unwanted loads on internal steel stop rings when tipper body is fully loaded.*

DETTAGLI TECNICI - TECHNICAL DATA

Codice Code	Modello Model	Corsa Utile Power Stroke (mm)	N° Sfili Extensions N°	Peso Weight (Kg)	Consumo Olio Oil Consumption (dm^3)	Mas. Tot Ribaltabile Total Mass Tip-Up (ton)	M	N	O	P	Q	S	T	U	Z
							(mm)								
N1163624001	IU 249 6370 10	6364	10	360	127.2	26	922	277	645	140	150	73	70	296	340
N1157224901	IU 249 5730 9	5727	9	349	125.4	31	915	270	645	140	150	73	70	296	340
N1150924801	IU 249 5090 8	5090	8	345	122.2	36	908	263	645	140	150	73	70	296	340
N1144524701	IU 249 4460 7	4453	7	335	117.4	42	929	284	645	140	170	92	70	296	340
N1138124601	IU 249 3820 6	3818	6	330	110.7	48	922	277	645	140	170	92	70	296	340
N1155624001	IU 249 5570 10	5564	10	327	111.2	26	842	277	565	140	150	73	70	296	340
N1150024901	IU 249 5010 9	5007	9	315	109.6	31	835	270	565	140	150	73	70	296	340
N1144524801	IU 249 4450 8	4450	8	315	106.9	36	828	263	565	140	150	73	70	296	340
N1138924701	IU 249 3900 7	3893	7	307	102.7	42	849	284	565	140	170	92	70	296	340
N1133324601	IU 249 3340 6	3338	6	300	96.8	48	842	277	565	140	170	92	70	296	340
N1246524001	IUS 249 4580 10	4573	10	281	92.8	28	737	255	482	118	150	73	70	296	340
N1241024901	IUS 249 4110 9	4108	9	278	90.8	33	730	248	482	118	150	73	70	296	340
N1236424801	IUS 249 3650 8	3644	8	275	87.8	37	723	241	482	118	150	73	70	296	340
N1231824701	IUS 249 3180 7	3180	7	274	83.8	42	736	254	482	118	170	92	70	296	340
N1227124601	IUS 249 2720 6	2717	6	272	78.6	48	737	255	482	118	170	92	70	296	340
N1238724001	IUS 249 3880 10	3873	10	252	78.5	28	667	255	412	118	150	73	70	296	340
N1234724901	IUS 249 3480 9	3478	9	249	76.7	33	660	248	412	118	150	73	70	296	340
N1230824801	IUS 249 3090 8	3084	8	246	74.2	37	653	241	412	118	150	73	70	296	340
N1226924701	IUS 249 2690 7	2690	7	246	70.8	42	666	254	412	118	170	92	70	296	340
N1222924601	IUS 249 2300 6	2297	6	244	66.4	48	667	255	412	118	170	92	70	296	340
N1236224001	IUS 249 3630 10	3623	10	241	73.4	28	642	255	387	118	150	73	70	296	340
N1232524901	IUS 249 3260 9	3253	9	239	71.7	33	635	248	387	118	150	73	70	296	340
N1228824801	IUS 249 2890 8	2884	8	237	69.4	37	628	241	387	118	150	73	70	296	340
N1225124701	IUS 249 2520 7	2515	7	233	66.2	42	641	254	387	118	170	92	70	296	340
N1221424601	IUS 249 2150 6	2147	6	231	62.0	48	642	255	387	118	170	92	70	296	340
N1230724001	IUS 249 3080 10	3073	10	219	62.1	28	586	254	332	118	150	73	70	296	340
N1227524901	IUS 249 2760 9	2758	9	217	60.7	33	579	247	332	118	150	73	70	296	340
N1224424801	IUS 249 2450 8	2444	8	215	58.7	37	572	240	332	118	150	73	70	296	340
N1221324701	IUS 249 2130 7	2130	7	215	56.0	42	585	253	332	118	170	92	70	296	340
N1218124601	IUS 249 1820 6	1817	6	213	52.4	48	586	254	332	118	170	92	70	296	340
Max pressure = 175 bar															

HEAVY DUTY
IU 249 - IUS 249

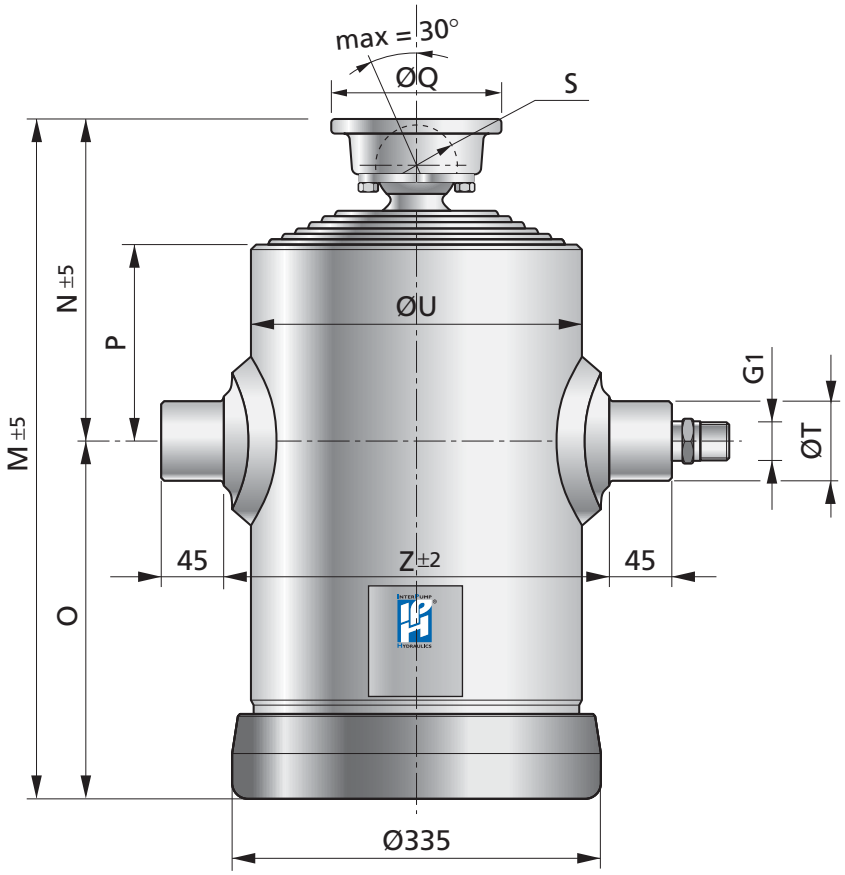

IU 249 - IUS 249

Tipo Type	Sfilate Extensions	Diametro Diameter									
		I	II	III	IV	V	VI	VII	VIII	IX	X
IU 249	10	249	221,5	196	174	154	135	116	98	79	61
	9	249	221,5	196	174	154	135	116	98	79	
	8	249	221,5	196	174	154	135	116	98		
	7	249	221,5	196	174	154	135	116			
	6	249	221,5	196	174	154	135				
IUS 249	10	249	221,5	196	174	154	135	120	105	90	75
	9	249	221,5	196	174	154	135	120	105	90	
	8	249	221,5	196	174	154	135	120	105		
	7	249	221,5	196	174	154	135	120			
	6	249	221,5	196	174	154	135				

ACCESSORI - ACCESSORIES

Supporto cilindro
Cylinder support

Supporto bilanciere
Cradle support

Bilanciere
Cradle

● **Vedi pagine 34 e 35 per dettagli**
See pages 34-35 for details

PULL-OUT

La quota indicata con **N** (centro mozzi/centro snodo) si intende a cilindro completamente chiuso.
Si raccomanda di prevedere un pull-out di 20-25 mm, per evitare carichi indesiderati sugli anelli interni di fermo del cilindro in condizione di pieno carico.

*Dimension marked as **N** (closed centre dimension) refers to cylinder completely closed. It is recommended to fit the cylinder with 20-25 mm pull-out more than the specified **N** dimension, in order to avoid unwanted loads on internal steel stop rings when tipper body is fully loaded.*

DETTAGLI TECNICI - TECHNICAL DATA

Codice Code	Modello Model	Corsa Utile Power Stroke (mm)	N° Sfili Extensions N°	Peso Weight (Kg)	Consumo Olio Oil Consumption (dm^3)	Mas. Tot Ribaltabile Total Mass Tip-Up (ton)	M	N	O	P	Q	S	T	U	Z
							(mm)								
N1228724001	IUS 249 2870 10	2870	10	210	57.9	28	566	254	312	118	150	73	70	296	340
N1225724901	IUS 249 2580 9	2575	9	208	56.6	33	559	247	312	118	150	73	70	296	340
N1222824801	IUS 249 2290 8	2281	8	206	54.7	37	552	240	312	118	150	73	70	296	340
N1219824701	IUS 249 1990 7	1987	7	207	52.2	42	565	253	312	118	170	92	70	296	340
N1216924601	IUS 249 1700 6	1694	6	205	48.9	48	566	254	312	118	170	92	70	296	340
N1226824001	IUS 249 2690 10	2689	10	207	56.2	28	521	251	270	160	150	73	70	296	340
N1224424901	IUS 249 2440 9	2440	9	205	55.1	33	521	251	270	160	150	73	70	296	340
N1221824801	IUS 249 2190 8	2185	8	204	53.5	37	521	251	270	160	150	73	70	296	340
N1219224701	IUS 249 1930 7	1923	7	205	51.2	42	541	271	270	160	170	92	70	296	340
N1216524601	IUS 249 1660 6	1655	6	203	48.2	48	549	279	270	160	170	92	70	296	340
N1224824001	IUS 249 2480 10	2480	10	192	51.5	28	492	225	267	128	150	73	70	296	340
N1222424901	IUS 249 2250 9	2246	9	191	50.5	33	490	223	267	128	150	73	70	296	340
N1220024801	IUS 249 2010 8	2007	8	190	49.0	37	488	221	267	128	150	73	70	296	340
N1217624701	IUS 249 1770 7	1765	7	191	46.9	42	506	239	267	128	170	92	70	296	340
N1215124601	IUS 249 1520 6	1517	6	190	44.1	48	512	245	267	128	170	92	70	296	340
N1221324001	IUS 249 2130 10	2130	10	178	44.6	28	451	189	262	100	150	73	70	296	340
N1219324901	IUS 249 1940 9	1937	9	177	43.8	33	451	189	262	100	150	73	70	296	340
N1217324801	IUS 249 1740 8	1737	8	176	42.5	37	451	189	262	100	150	73	70	296	340
N1215324701	IUS 249 1540 7	1532	7	178	40.7	42	471	209	262	100	170	92	70	296	340
N1213124601	IUS 249 1320 6	1319	6	177	38.3	48	479	217	262	100	170	92	70	296	340
N1218524001	IUS 249 1860 10	1857	10	165	38.5	28	418	202	216	118	150	73	70	296	340
N1216824901	IUS 249 1690 9	1684	9	164	37.7	33	418	202	216	118	150	73	70	296	340
N1215024801	IUS 249 1510 8	1504	8	164	36.6	37	418	202	216	118	150	73	70	296	340
N1213124701	IUS 249 1320 7	1319	7	165	35.0	42	438	222	216	118	170	92	70	296	340
N1211224601	IUS 249 1130 6	1126	6	164	32.8	48	446	230	216	118	170	92	70	296	340

Max pressure = 175 bar

HEAVY DUTY
IU 222 - IUS 222

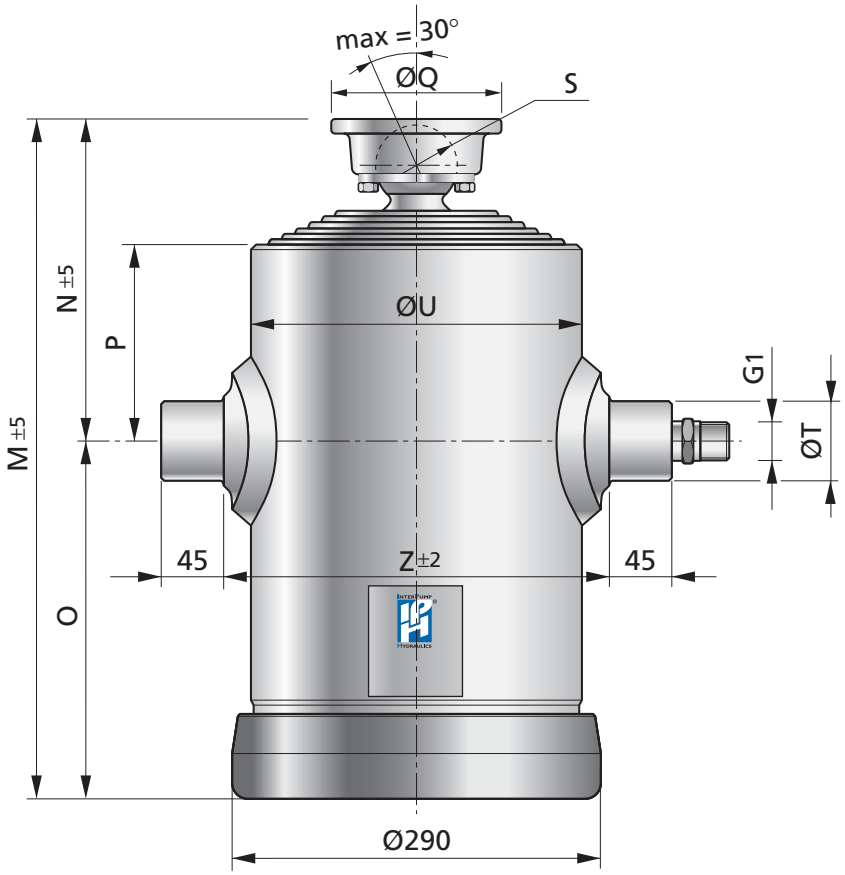

IU 222 - IUS 222

Tipo Type	Sfilate Extensions	Diametro Diameter									
		I	II	III	IV	V	VI	VII	VIII	IX	X
IU 222	9	221,5	196	174	154	135	116	98	79	61	
	8	221,5	196	174	154	135	116	98	79		
	7	221,5	196	174	154	135	116	98			
	6	221,5	196	174	154	135	116				
IUS 222	10	221,5	196	174	154	135	120	105	90	75	60
	9	221,5	196	174	154	135	120	105	90		
	8	221,5	196	174	154	135	120	105			
	7	221,5	196	174	154	135	120				
	6	221,5	196	174	154	135					

ACCESSORI - ACCESSORIES

Supporto cilindro
Cylinder support

Supporto bilanciere
Cradle support

Bilanciere
Cradle

● **Vedi pagine 34 e 35 per dettagli**
See pages 34-35 for details

PULL-OUT

La quota indicata con **N** (centro mozzi/centro snodo) si intende a cilindro completamente chiuso.
Si raccomanda di prevedere un pull-out di 20-25 mm, per evitare carichi indesiderati sugli anelli interni di fermo del cilindro in condizione di pieno carico.

*Dimension marked as **N** (closed centre dimension) refers to cylinder completely closed. It is recommended to fit the cylinder with 20-25 mm pull-out more than the specified **N** dimension, in order to avoid unwanted loads on internal steel stop rings when tipper body is fully loaded.*

DETTAGLI TECNICI - TECHNICAL DATA

Codice Code	Modello Model	Corsa Utile Power Stroke (mm)	N° Sfili Extensions N°	Peso Weight (Kg)	Consumo Olio Oil Consumption (dm^3)	Mas. Tot Ribaltabile Total Mass Tip-Up (ton)	M	N	O	P	Q	S	T	U	Z
							(mm)								
N1157322901	IU 222 5740 9	5731	9	263	96.4	23	907	255	652	123	150	73	70	252	340
N1150922801	IU 222 5100 8	5094	8	252	94.6	27	900	248	652	123	150	73	70	252	340
N1144522701	IU 222 4460 7	4457	7	248	91.4	32	893	241	652	123	150	73	70	252	340
N1138222601	IU 222 3820 6	3820	6	238	86.6	37	914	262	652	123	170	92	70	252	340
N1150122901	IU 222 5020 9	5011	9	241	84.3	23	827	255	572	123	150	73	70	252	340
N1144522801	IU 222 4460 8	4454	8	232	82.7	27	820	248	572	123	150	73	70	252	340
N1138922701	IU 222 3900 7	3897	7	231	80.0	32	813	241	572	123	150	73	70	252	340
N1133422601	IU 222 3340 6	3340	6	223	75.8	37	834	262	572	123	170	92	70	252	340
N1245922001	IUS 222 4600 10	4592	10	203	72.4	21	729	257	472	118	150	73	55	252	310
N1241222901	IUS 222 4130 9	4127	9	194	71.1	25	722	250	472	118	150	73	55	252	310
N1236622801	IUS 222 3670 8	3663	8	191	69.1	29	715	243	472	118	150	73	55	252	310
N1231922701	IUS 222 3200 7	3198	7	188	66.1	33	708	236	472	118	150	73	55	252	310
N1227322601	IUS 222 2740 6	2735	6	185	62.1	37	721	249	472	118	170	92	55	252	310
N1238922001	IUS 222 3900 10	3892	10	183	61.3	21	659	257	402	118	150	73	55	252	310
N1234922901	IUS 222 3500 9	3497	9	174	60.2	25	652	250	402	118	150	73	55	252	310
N1231022801	IUS 222 3110 8	3103	8	172	58.5	29	645	243	402	118	150	73	55	252	310
N1227022701	IUS 222 2710 7	2708	7	169	56.0	33	638	236	402	118	150	73	55	252	310
N1223122601	IUS 222 2320 6	2315	6	169	52.5	37	651	249	402	118	170	92	55	252	310
N1236422001	IUS 222 3650 10	3642	10	176	57.3	21	634	257	377	118	150	73	55	252	310
N1232722901	IUS 222 3280 89	3272	9	167	56.3	25	627	250	377	118	150	73	55	252	310
N1229022801	IUS 222 2910 8	2903	8	165	54.7	29	620	243	377	118	150	73	55	252	310
N1225322701	IUS 222 2540 7	2533	7	162	52.3	33	613	236	377	118	150	73	55	252	310
N1221622601	IUS 222 2170 6	2165	6	162	49.1	37	626	249	377	118	170	92	55	252	310
N1230922001	IUS 222 3100 10	3092	10	159	48.6	21	578	256	322	118	150	73	55	252	310
N1227722901	IUS 222 2780 9	2777	9	152	47.7	25	571	249	322	118	150	73	55	252	310
N1224622801	IUS 222 2470 8	2463	8	150	46.3	29	564	242	322	118	150	73	55	252	310
N1221422701	IUS 222 2150 7	2148	7	148	44.3	33	557	235	322	118	150	73	55	252	310
N1218322601	IUS 222 1840 6	1835	6	148	41.6	37	570	248	322	118	170	92	55	252	310
N1228822001	IUS 222 2890 10	2889	10	153	45.3	21	558	261	297	123	150	73	55	252	310
N1225922901	IUS 222 2600 9	2594	9	146	44.5	25	551	254	297	123	150	73	55	252	310
Max pressure = 200 bar															

HEAVY DUTY

IU 222 - IUS 222

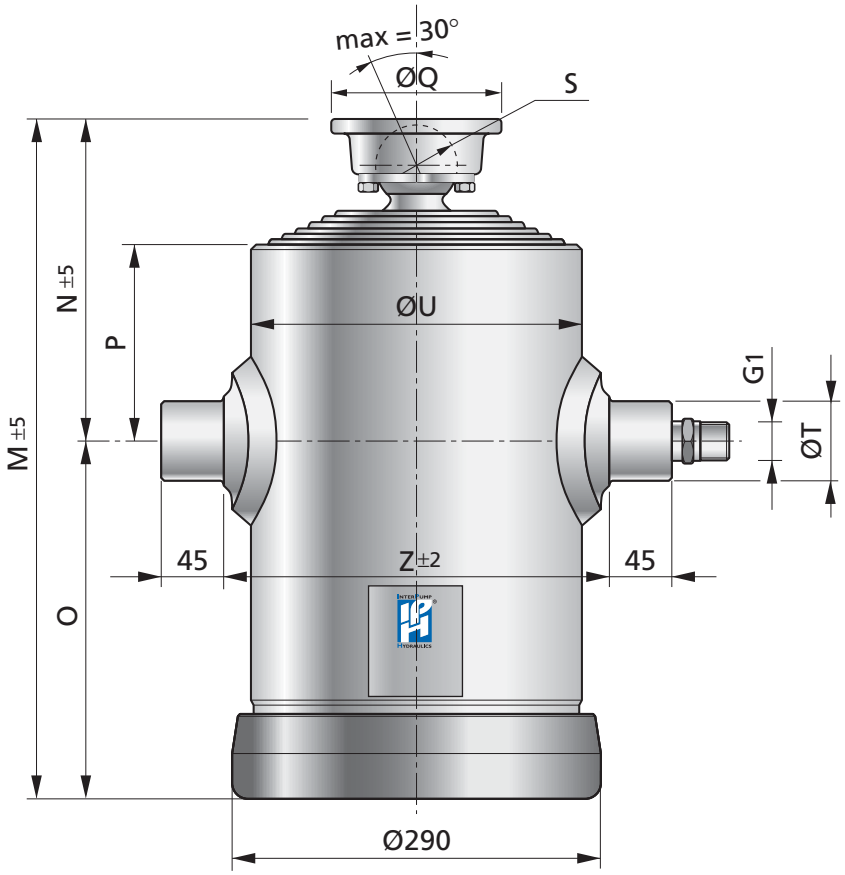

IU 222 - IUS 222

Tipo Type	Sfilate Extensions	Diametro Diameter									
		I	II	III	IV	V	VI	VII	VIII	IX	X
IU 222	9	221,5	196	174	154	135	116	98	79	61	
	8	221,5	196	174	154	135	116	98	79		
	7	221,5	196	174	154	135	116	98			
	6	221,5	196	174	154	135	116				
IUS 222	10	221,5	196	174	154	135	120	105	90	75	60
	9	221,5	196	174	154	135	120	105	90		
	8	221,5	196	174	154	135	120	105			
	7	221,5	196	174	154	135	120				
	6	221,5	196	174	154	135					

ACCESSORI - ACCESSORIES

Supporto cilindro
Cylinder support

Supporto bilanciere
Cradle support

Bilanciere
Cradle

● **Vedi pagine 34 e 35 per dettagli**
See pages 34-35 for details

PULL-OUT

La quota indicata con **N** (centro mozzi/centro snodo) si intende a cilindro completamente chiuso.
Si raccomanda di prevedere un pull-out di 20-25 mm, per evitare carichi indesiderati sugli anelli interni di fermo del cilindro in condizione di pieno carico.

*Dimension marked as **N** (closed centre dimension) refers to cylinder completely closed. It is recommended to fit the cylinder with 20-25 mm pull-out more than the specified **N** dimension, in order to avoid unwanted loads on internal steel stop rings when tipper body is fully loaded.*

DETTAGLI TECNICI - TECHNICAL DATA

Codice Code	Modello Model	Corsa Utile Power Stroke (mm)	N° Sfili Extensions N°	Peso Weight (Kg)	Consumo Olio Oil Consumption (dm^3)	Mas. Tot Ribaltabile Total Mass Tip-Up (ton)	M	N	O	P	Q	S	T	U	Z
							(mm)								
N1223022801	**IUS 222 2300 8**	2300	8	144	43.2	29	544	247	297	123	150	73	55	252	310
N1220022701	**IUS 222 2010 7**	2005	7	140	41.3	33	537	240	297	123	150	73	55	252	310
N1217122601	**IUS 222 1720 6**	1712	6	141	38.8	37	550	253	297	123	170	92	55	252	310
N1226522001	**IUS 222 2660 10**	2655	10	148	43.5	21	506	254	252	168	150	73	55	252	310
N1224122901	**IUS 222 2420 9**	2413	9	142	42.8	25	506	254	252	168	150	73	55	252	310
N1221622801	**IUS 222 2170 8**	2165	8	141	41.7	29	506	254	252	168	150	73	55	252	310
N1219022701	**IUS 222 1910 7**	1909	7	139	40.1	33	506	254	252	168	150	73	55	252	310
N1216422601	**IUS 222 1650 6**	1648	6	140	37.8	37	526	274	252	168	170	92	55	252	310
N1224522001	**IUS 222 2460 10**	2458	10	137	40.0	21	479	252	227	153	150	73	55	252	310
N1222222901	**IUS 222 2230 9**	2229	9	132	39.3	25	477	250	227	153	150	73	55	252	310
N1219922801	**IUS 222 2000 8**	1995	8	131	38.3	29	475	248	227	153	150	73	55	252	310
N1217522701	**IUS 222 1760 7**	1756	7	129	36.8	33	473	246	227	153	150	73	55	252	310
N1215122601	**IUS 222 1520 6**	1514	6	130	34.7	37	491	264	227	153	170	92	55	252	310
N1220922001	**IUS 222 2100 10**	2098	10	127	34.6	21	436	242	194	153	150	73	55	252	310
N1219122901	**IUS 222 1920 9**	1912	9	122	34.1	25	436	242	194	153	150	73	55	252	310
N1217122801	**IUS 222 1720 8**	1719	8	121	33.2	29	436	242	194	153	150	73	55	252	310
N1215122701	**IUS 222 1520 7**	1519	7	120	31.9	33	436	242	194	153	150	73	55	252	310
N1213122601	**IUS 222 1320 6**	1314	6	121	30.2	37	456	262	194	153	170	92	55	252	310
N1218322001	**IUS 222 1840 10**	1838	10	117	30.0	21	403	202	201	118	150	73	55	252	310
N1216722901	**IUS 222 1680 9**	1672	9	113	29.5	25	403	202	201	118	150	73	55	252	310
N1214922801	**IUS 222 1500 8**	1499	8	112	28.7	29	403	202	201	118	150	73	55	252	310
N1213122701	**IUS 222 1320 7**	1319	7	112	27.6	33	403	202	201	118	150	73	55	252	310
N1211322601	**IUS 222 1140 6**	1134	6	113	26.0	37	423	222	201	118	170	92	55	252	310

Max pressure = 200 bar

HEAVY DUTY
IU 196 - IUS 196

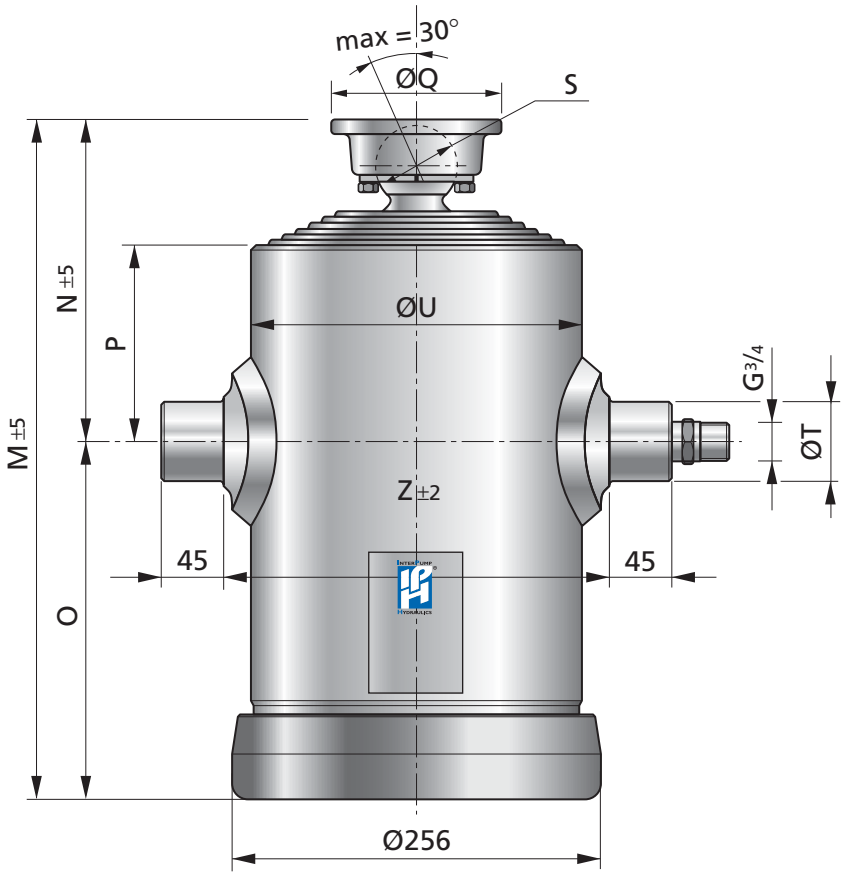

IU 196 - IUS 196

Tipo Type	Sfilate Extensions	Diametro Diameter								
		I	II	III	IV	V	VI	VII	VIII	IX
IU 196	8	196	174	154	135	116	98	79	61	
	7	196	174	154	135	116	98	79		
	6	196	174	154	135	116	98			
	5	196	174	154	135	116				
IUS 196	9	196	174	154	135	120	105	90	75	60
	8	196	174	154	135	120	105	90	75	
	7	196	174	154	135	120	105	90		
	6	196	174	154	135	120	105			
	5	196	174	154	135	120				

ACCESSORI - ACCESSORIES

Supporto cilindro
Cylinder support

Supporto bilanciere
Cradle support

Bilanciere
Cradle

● **Vedi pagine 34 e 35 per dettagli**
See pages 34-35 for details

PULL-OUT

La quota indicata con **N** (centro mozzi/centro snodo) si intende a cilindro completamente chiuso.
Si raccomanda di prevedere un pull-out di 20-25 mm, per evitare carichi indesiderati sugli anelli interni di fermo del cilindro in condizione di pieno carico.

*Dimension marked as **N** (closed centre dimension) refers to cylinder completely closed. It is recommended to fit the cylinder with 20-25 mm pull-out more than the specified **N** dimension, in order to avoid unwanted loads on internal steel stop rings when tipper body is fully loaded.*

DETTAGLI TECNICI - TECHNICAL DATA

Codice Code	Modello Model	Corsa Utile Power Stroke (mm)	N° Sfili Extensions N°	Peso Weight (Kg)	Consumo Olio Oil Consumption (dm^3)	Mas. Tot Ribaltabile Total Mass Tip-Up (ton)	M	N	O	P	Q	S	T	U	Z
							(mm)								
N1150919801	IU 196 5100 8	5096	8	215	71.9	21	901	255	646	128	150	73	50	228	268
N1144519701	IU 196 4460 7	4459	7	207	70.1	26	894	248	646	128	150	73	50	228	268
N1138219601	IU 196 3830 6	3822	6	194	67.0	31	887	241	646	128	150	73	50	228	268
N1131819501	IU 196 3190 5	3185	5	184	62.2	35	908	262	646	128	170	92	50	228	268
N1144519801	IU 196 4460 8	4456	8	180	62.9	21	821	255	566	128	150	73	50	228	268
N1138919701	IU 196 3900 7	3899	7	173	61.3	26	814	248	566	128	150	73	50	228	268
N1133419601	IU 196 3350 6	3342	6	169	58.6	31	807	241	566	128	150	73	50	228	268
N1127819501	IU 196 2790 5	2785	5	164	54.4	35	828	262	566	128	170	92	50	228	268
N1241419901	IUS 196 4150 9	4143	9	153	55.2	20	723	252	471	118	150	73	50	228	268
N1236719801	IUS 196 3680 8	3679	8	151	53.9	24	716	245	471	118	150	73	50	228	268
N1232119701	IUS 196 3220 7	3214	7	148	51.8	28	709	238	471	118	150	73	50	228	268
N1227519601	IUS 196 2750 6	2750	6	145	48.8	32	702	231	471	118	150	73	50	228	268
N1222819501	IUS 196 2290 5	2286	5	144	44.8	36	715	244	471	118	170	92	50	228	268
N1235119001	IUS 196 3520 9	3513	9	139	46.7	20	653	252	401	118	150	73	50	228	268
N1231119801	IUS 196 3120 8	3119	8	136	45.6	24	646	245	401	118	150	73	50	228	268
N1227219701	IUS 196 2730 7	2724	7	133	43.9	28	639	238	401	118	150	73	50	228	268
N1223319601	IUS 196 2330 6	2330	6	130	41.4	32	632	231	401	118	150	73	50	228	268
N1219319501	IUS 196 1940 5	1936	5	131	38.0	36	645	244	401	118	170	92	50	228	268
N1232819901	IUS 196 3290 9	3288	9	139	43.7	20	628	252	376	118	150	73	50	228	268
N1229119801	IUS 196 2920 8	2919	8	130	42.7	24	621	245	376	118	150	73	50	228	268
N1225419701	IUS 196 2550 7	2549	7	128	41.0	28	614	238	376	118	150	73	50	228	268
N1221819601	IUS 196 2180 6	2180	6	125	38.7	32	607	231	376	118	150	73	50	228	268
N1218119501	IUS 196 1820 5	1811	5	124	35.5	36	620	244	376	118	170	92	50	228	268
N1227919901	IUS 196 2800 9	2793	9	126	37.1	20	572	251	321	118	150	73	50	228	268
N1224719801	IUS 196 2480 8	2479	8	117	36.2	24	565	244	321	118	150	73	50	228	268
N1221619701	IUS 196 2170 7	2164	7	116	34.8	28	558	237	321	118	150	73	50	228	268
N1218519601	IUS 196 1850 6	1850	6	114	32.8	32	551	230	321	118	150	73	50	228	268
N1215319501	IUS 196 1540 5	1536	5	114	30.1	36	564	243	321	118	170	92	50	228	268
N1226119901	IUS 196 2620 9	2613	9	121	34.7	20	552	261	291	128	150	73	50	228	268
N1223119801	IUS 196 2320 8	2319	8	114	33.9	24	545	254	291	128	150	73	50	228	268
Max pressure = 200 bar															

HEAVY DUTY
IU 196 - IUS 196

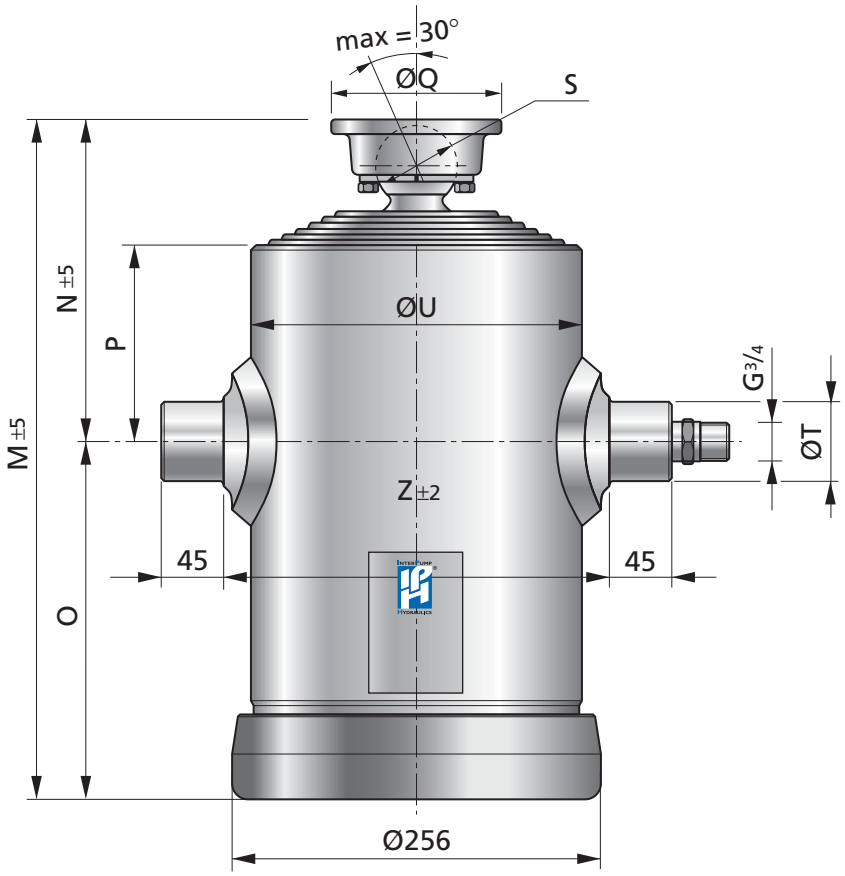

IU 196 - IUS 196

Tipo Type	Sfilate Extensions	Diametro Diameter								
		I	II	III	IV	V	VI	VII	VIII	IX
IU 196	8	196	174	154	135	116	98	79	61	
	7	196	174	154	135	116	98	79		
	6	196	174	154	135	116	98			
	5	196	174	154	135	116				
IUS 196	9	196	174	154	135	120	105	90	75	60
	8	196	174	154	135	120	105	90	75	
	7	196	174	154	135	120	105	90		
	6	196	174	154	135	120	105			
	5	196	174	154	135	120				

ACCESSORI - ACCESSORIES

Supporto cilindro
Cylinder support

Supporto bilanciere
Cradle support

Bilanciere
Cradle

● **Vedi pagine 34 e 35 per dettagli**
See pages 34-35 for details

PULL-OUT

La quota indicata con **N** (centro mozzi/centro snodo) si intende a cilindro completamente chiuso.
Si raccomanda di prevedere un pull-out di 20-25 mm, per evitare carichi indesiderati sugli anelli interni di fermo del cilindro in condizione di pieno carico.

*Dimension marked as **N** (closed centre dimension) refers to cylinder completely closed. It is recommended to fit the cylinder with 20-25 mm pull-out more than the specified **N** dimension, in order to avoid unwanted loads on internal steel stop rings when tipper body is fully loaded.*

DETTAGLI TECNICI - TECHNICAL DATA

Codice Code	Modello Model	Corsa Utile Power Stroke (mm)	N° Sfili Extensions N°	Peso Weight (Kg)	Consumo Olio Oil Consumption (dm^3)	Mas. Tot Ribaltabile Total Mass Tip-Up (ton)	M	N	O	P	Q	S	T	U	Z
							(mm)								
N1220219701	**IUS 196 2030 7**	2024	7	112	32.6	28	538	247	291	128	150	73	50	228	268
N1217319601	**IUS 196 1730 6**	1730	6	110	30.7	32	531	240	291	128	150	73	50	228	268
N1214319501	**IUS 196 1440 5**	1436	5	111	28.1	36	544	253	291	128	170	92	50	228	268
N1223719901	**IUS 196 2380 9**	2374	9	116	32.7	20	500	254	246	168	150	73	50	228	268
N1221319801	**IUS 196 2140 8**	2133	8	110	32.0	24	500	254	246	168	150	73	50	228	268
N1218819701	**IUS 196 1890 7**	1884	7	109	30.9	28	500	254	246	168	150	73	50	228	268
N1216219601	**IUS 196 1630 6**	1629	6	107	29.3	32	500	254	246	168	150	73	50	228	268
N1213619501	**IUS 196 1370 5**	1367	5	108	27.0	36	520	274	246	168	170	92	50	228	268
N1222019901	**IUS 196 2200 9**	2200	9	107	30.1	20	473	252	221	153	150	73	50	228	268
N1219719801	**IUS 196 1980 8**	1971	8	102	29.4	24	471	250	221	153	150	73	50	228	268
N1217319701	**IUS 196 1740 7**	1737	7	101	28.4	28	469	248	221	153	150	73	50	228	268
N1214919601	**IUS 196 1500 6**	1498	6	99	26.9	32	467	246	221	153	150	73	50	228	268
N1212519501	**IUS 196 1260 5**	1256	5	101	24.8	36	485	264	221	153	170	92	50	228	268
N1218719901	**IUS 196 1880 9**	1873	9	99	26.0	20	430	242	188	153	150	73	50	228	268
N1216819801	**IUS 196 1690 8**	1687	8	94	25.4	24	430	242	188	153	150	73	50	228	268
N1214919701	**IUS 196 1500 7**	1494	7	93	24.6	28	430	242	188	153	150	73	50	228	268
N1212919601	**IUS 196 1300 6**	1294	6	92	23.3	32	430	242	188	153	150	73	50	228	268
N1210819501	**IUS 196 1090 5**	1089	5	94	21.5	36	450	262	188	153	170	92	50	228	268
N1216419901	**IUS 196 1650 9**	1646	9	91	22.6	20	397	202	195	118	150	73	50	228	268
N1214819801	**IUS 196 1480 8**	1480	8	87	22.1	24	397	202	195	118	150	73	50	228	268
N1213019701	**IUS 196 1310 7**	1307	7	86	21.3	28	397	202	195	118	150	73	50	228	268
N1211219601	**IUS 196 1130 6**	1127	6	86	20.2	32	397	202	195	118	150	73	50	228	268
N1209419501	**IUS 196 0950 5**	942	5	85	18.6	36	397	202	195	118	150	73	50	228	268

Max pressure = 200 bar

HEAVY DUTY
IU 174 - IUS 174

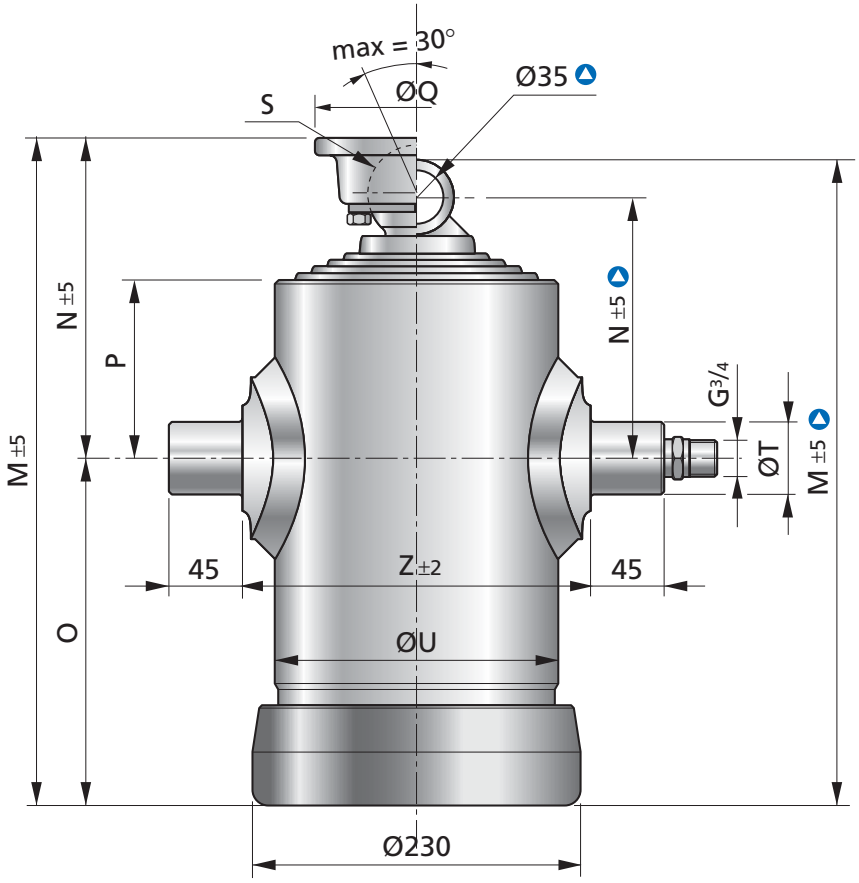

IU 174 - IUS 174

Tipo Type	Sfilate Extensions	Diametro Diameter							
		I	II	III	IV	V	VI	VII	VIII
IU 174	7	174	154	135	116	98	79	61	
	6	174	154	135	116	98	79		
	5	174	154	135	116	98			
	4	174	154	135	116				
IUS 174	8	174	154	135	120	105	90	75	60
	7	174	154	135	120	105	90	75	
	6	174	154	135	120	105	90		
	5	174	154	135	120	105			

ACCESSORI - ACCESSORIES

Supporto cilindro
Cylinder support

Supporto bilanciere
Cradle support

Bilanciere
Cradle

● **Vedi pagine 34 e 35 per dettagli**
See pages 34-35 for details

PULL-OUT

La quota indicata con **N** (centro mozzi/centro snodo) si intende a cilindro completamente chiuso.
Si raccomanda di prevedere un pull-out di 20-25 mm, per evitare carichi indesiderati sugli anelli interni di fermo del cilindro in condizione di pieno carico.

*Dimension marked as **N** (closed centre dimension) refers to cylinder completely closed. It is recommended to fit the cylinder with 20-25 mm pull-out more than the specified **N** dimension, in order to avoid unwanted loads on internal steel stop rings when tipper body is fully loaded.*

DETTAGLI TECNICI - TECHNICAL DATA

Codice Code	Modello Model	Corsa Utile Power Stroke (mm)	N° Sfili Extensions N°	Peso Weight (Kg)	Consumo Olio Oil Consumption (dm³)	Mas. Tot Ribaltabile Total Mass Tip-Up (ton)	M	N	O	P	Q	S	T	U	Z
							(mm)								
N1144517701	IU 174 4460 7	4455	7	165	52.6	20	894	255	639	133	150	73	50	198	238
N1138117601	IU 174 3820 6	3818	6	155	50.7	24	887	248	639	133	150	73	50	198	238
N1131817501	IU 174 3190 5	3181	5	142	47.6	28	880	241	639	133	150	73	50	198	238
N1125417401	IU 174 2550 4	2544	4	138	42.8	33	901	262	639	133	170	92	50	198	238
▲ N1144517703	IU 174 4460 7	4455	7	162	52.6	20	910	244	639	133			50	198	238
▲ N1138117603	IU 174 3820 6	3818	6	152	50.7	24	885	218	639	133			50	198	238
N1138917701	IU 174 3900 7	3895	7	140	46.0	20	814	255	559	133	150	73	50	198	238
N1133317601	IU 174 3340 6	3338	6	133	44.4	24	807	248	559	133	150	73	50	198	238
N1127817501	IU 174 2790 5	2781	5	129	41.6	28	800	241	559	133	150	73	50	198	238
▲ N1138917703	IU 174 3900 7	3895	7	139	46.0	20	830	244	559	133			50	198	238
▲ N1133317603	IU 174 3340 6	3338	6	132	44.4	24	805	218	559	133			50	198	238
N1236817801	IUS 174 3690 8	3689	8	125	41.5	19	707	253	454	133	120	58	50	198	238
N1232217701	IUS 174 3230 7	3225	7	117	40.2	22	709	255	454	133	150	73	50	198	238
N1227617601	IUS 174 2760 6	2760	6	114	38.1	26	702	248	454	133	150	73	50	198	238
N1222917501	IUS 174 2300 5	2296	5	111	35.1	29	695	241	454	133	150	73	50	198	238
N1231217801	IUS 174 3130 8	3129	8	112	35.1	19	637	238	399	118	120	58	50	198	238
N1227317701	IUS 174 2740 7	2735	7	106	34.0	22	639	240	399	118	150	73	50	198	238
N1223417601	IUS 174 2340 6	2340	6	103	32.3	26	632	233	399	118	150	73	50	198	238
N1219417501	IUS 174 1950 5	1946	5	100	29.8	29	625	226	399	118	150	73	50	198	238
N1229217801	IUS 174 2930 8	2929	8	108	32.9	19	612	238	374	118	120	58	50	198	238
N1225617701	IUS 174 2560 7	2560	7	102	31.8	22	614	240	374	118	150	73	50	198	238
N1221917601	IUS 174 2190 6	2190	6	99	30.2	26	607	233	374	118	150	73	50	198	238
N1218217501	IUS 174 1830 5	1821	5	97	27.9	29	600	226	374	118	150	73	50	198	238
N1224817801	IUS 174 2490 8	2489	8	97	27.9	19	556	237	319	118	120	58	50	198	238
N1221717701	IUS 174 2180 7	2175	7	92	27.0	22	558	239	319	118	150	73	50	198	238
N1218617601	IUS 174 1860 6	1860	6	90	25.6	26	551	232	319	118	150	73	50	198	238
N1215417501	IUS 174 1550 5	1546	5	88	23.6	29	544	225	319	118	150	73	50	198	238
N1223217801	IUS 174 2330 8	2329	8	94	26.1	19	536	252	284	133	120	58	50	198	238
N1220317701	IUS 174 2040 7	2035	7	89	25.3	22	538	254	284	133	150	73	50	198	238
N1217417601	IUS 174 1740 6	1740	6	87	24.0	26	531	247	284	133	150	73	50	198	238

Max pressure = 200 bar

HEAVY DUTY
IU 174 - IUS 174

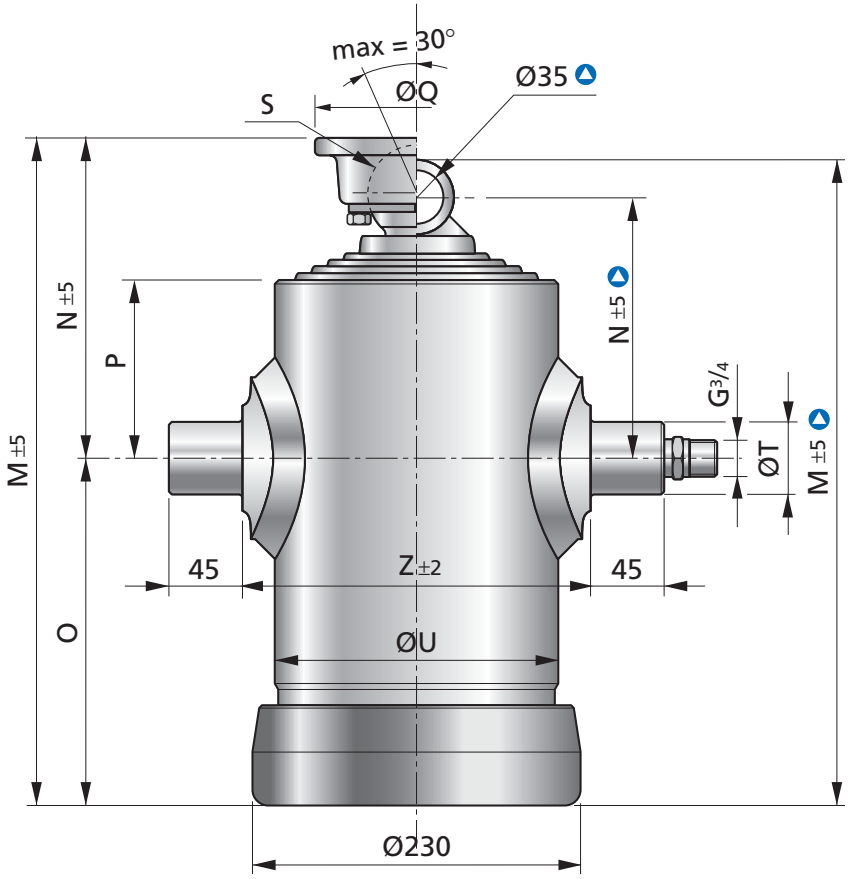

IU 174 - IUS 174

Tipo Type	Sfilate Extensions	Diametro Diameter							
		I	II	III	IV	V	VI	VII	VIII
IU 174	7	174	154	135	116	98	79	61	
	6	174	154	135	116	98	79		
	5	174	154	135	116	98			
	4	174	154	135	116				
IUS 174	8	174	154	135	120	105	90	75	60
	7	174	154	135	120	105	90	75	
	6	174	154	135	120	105	90		
	5	174	154	135	120	105			

ACCESSORI - ACCESSORIES

Supporto cilindro
Cylinder support

Supporto bilanciere
Cradle support

Bilanciere
Cradle

● **Vedi pagine 34 e 35 per dettagli**
See pages 34-35 for details

PULL-OUT

La quota indicata con **N** (centro mozzi/centro snodo) si intende a cilindro completamente chiuso.
Si raccomanda di prevedere un pull-out di 20-25 mm, per evitare carichi indesiderati sugli anelli interni di fermo del cilindro in condizione di pieno carico.

*Dimension marked as **N** (closed centre dimension) refers to cylinder completely closed. It is recommended to fit the cylinder with 20-25 mm pull-out more than the specified **N** dimension, in order to avoid unwanted loads on internal steel stop rings when tipper body is fully loaded.*

DETTAGLI TECNICI - TECHNICAL DATA

Codice Code	Modello Model	Corsa Utile Power Stroke (mm)	N° Sfili Extensions N°	Peso Weight (Kg)	Consumo Olio Oil Consumption (dm^3)	Mas. Tot Ribaltabile Total Mass Tip-Up (ton)	M	N	O	P	Q	S	T	U	Z
							(mm)								
N1214417501	**IUS 174 1450 5**	1446	5	85	22.1	29	524	240	284	133	150	73	50	198	238
N1220317703	**IUS 174 2040 7**	2035	7	89	25.3	22	529	245	284	133	120	58	50	198	238
N1220917801	**IUS 174 2100 8**	2093	8	89	24.2	19	484	245	239	168	120	58	50	198	238
N1218517701	**IUS 174 1860 7**	1852	7	86	23.5	22	493	254	239	168	150	73	50	198	238
N1216017601	**IUS 174 1610 6**	1603	6	84	22.4	26	493	254	239	168	150	73	50	198	238
N1213417501	**IUS 174 1350 5**	1348	5	82	20.8	29	493	254	239	168	150	73	50	198	238
N1219417801	**IUS 174 1950 8**	1942	8	82	22.3	19	457	243	214	153	120	58	50	198	238
N1217117701	**IUS 174 1720 7**	1713	7	80	21.7	22	464	250	214	153	150	73	50	198	238
N1214717601	**IUS 174 1480 6**	1479	6	78	20.6	26	462	248	214	153	150	73	50	198	238
N1212417501	**IUS 174 1240 5**	1240	5	77	19.1	29	460	246	214	153	150	73	50	198	238
N1217117703	**IUS 174 1720 7**	1713	7	80	21.7	22	455	241	214	153	120	58	50	198	238
N1216417801	**IUS 174 1650 8**	1648	8	76	19.2	19	414	233	181	153	120	58	50	198	238
N1214617701	**IUS 174 1470 7**	1462	7	74	18.7	22	423	242	181	153	150	73	50	198	238
N1212617601	**IUS 174 1270 6**	1269	6	73	17.8	26	423	242	181	153	150	73	50	198	238
N1210617501	**IUS 174 1070 5**	1069	5	72	16.5	29	423	242	181	153	150	73	50	198	238
N1214517801	**IUS 174 1460 8**	1454	8	70	16.8	19	381	193	188	118	120	58	50	198	238
N1212817701	**IUS 174 1290 7**	1288	7	69	16.3	22	390	202	188	118	150	73	50	198	238
N1211117601	**IUS 174 1120 6**	1115	6	68	15.5	26	390	202	188	118	150	73	50	198	238
N1209317501	**IUS 174 0940 5**	935	5	67	14.4	29	390	202	188	118	150	73	50	198	238
Max pressure = 200 bar															

HEAVY DUTY

IU 154 - IUS 154

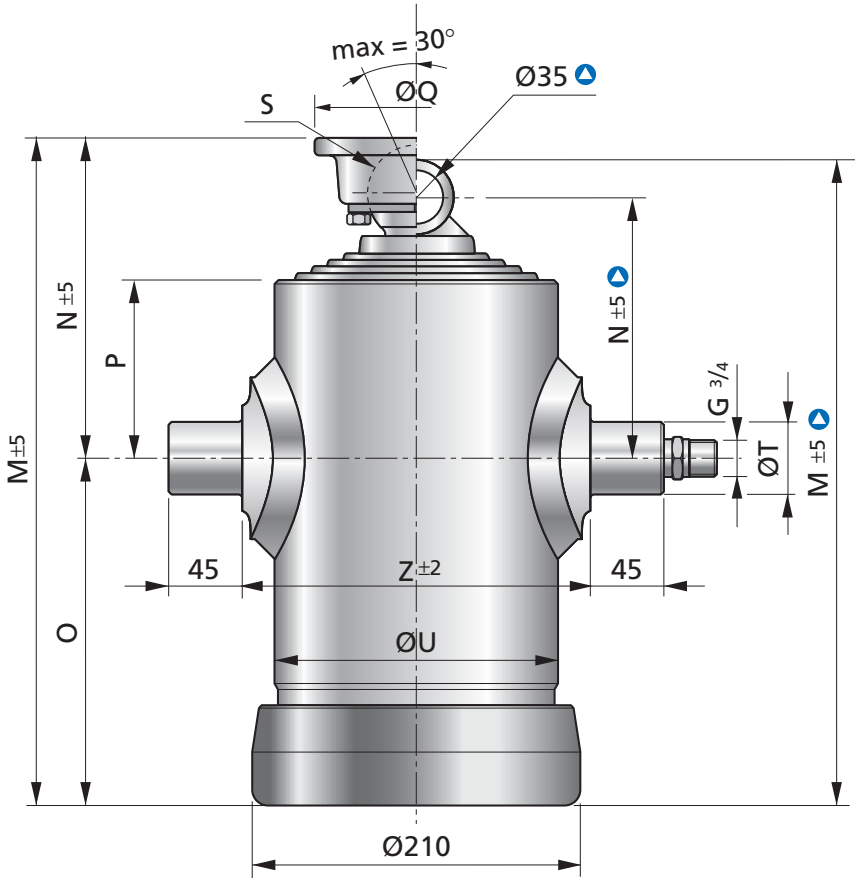

IU 154 - IUS 154

Tipo Type	Sfilate Extensions	Diametro Diameter							
		I	II	III	IV	V	VI	VII	VIII
IU 154	6	154	135	116	98	79	61		
	5	154	135	116	98	79			
	4	154	135	116	98				
IUS 154	8	154	135	120	105	90	75	60	
	7	154	135	120	105	90	75	60	
	6	154	135	120	105	90	75		
	5	154	135	120	105	90			
	4	154	135	120	105				

ACCESSORI - ACCESSORIES

Supporto cilindro
Cylinder support

Supporto bilanciere
Cradle support

Bilanciere
Cradle

● **Vedi pagine 34 e 35 per dettagli**
See pages 34-35 for details

PULL-OUT

La quota indicata con **N** (centro mozzi/centro snodo) si intende a cilindro completamente chiuso.
Si raccomanda di prevedere un pull-out di 20-25 mm, per evitare carichi indesiderati sugli anelli interni di fermo del cilindro in condizione di pieno carico.

*Dimension marked as **N** (closed centre dimension) refers to cylinder completely closed. It is recommended to fit the cylinder with 20-25 mm pull-out more than the specified **N** dimension, in order to avoid unwanted loads on internal steel stop rings when tipper body is fully loaded.*

DETTAGLI TECNICI - TECHNICAL DATA

Codice Code	Modello Model	Corsa Utile Power Stroke (mm)	N° Sfili Extensions N°	Peso Weight (Kg)	Consumo Olio Oil Consumption (dm3)	Mas. Tot Ribaltabile Total Mass Tip-Up (ton)	M	N	O	P	Q	S	T	U	Z
							(mm)								
N1138115601	IU 154 3820 6	3818	6	130	37.5	17	889	234	655	117	150	73	50	177	216
N1131815501	IU 154 3190 5	3181	5	120	35.6	21	882	227	655	117	150	73	50	177	216
N1125415401	IU 154 2550 4	2544	4	110	32.5	25	875	220	655	117	150	73	50	177	216
N1138115603	IU 154 3820 6	3818	6	130	37.5	17	905	223	655	117			50	177	216
N1131815503	IU 154 3190 5	3181	5	120	35.6	21	880	197	655	117			50	177	216
N1133315601	IU 154 3340 6	3338	6	118	32.7	17	809	234	575	117	150	73	50	177	216
N1127815501	IU 154 2790 5	2781	5	109	31.1	21	802	227	575	117	150	73	50	177	216
N1122215401	IU 154 2230 4	2224	4	106	28.4	25	795	220	575	117	150	73	50	177	216
N1133315603	IU 154 3340 6	3338	6	118	32.7	17	825	223	575	117			50	177	216
N1127815503	IU 154 2790 5	2781	5	109	31.1	21	800	197	575	117			50	177	216
N1232315701	IUS 154 3240 7	3232	7	102	30.6	16	702	233	469	118	120	58	50	177	216
N1227615601	IUS 154 2770 6	2768	6	94	29.3	19	704	235	469	118	150	73	50	177	216
N1223015501	IUS 154 2310 5	2303	5	91	27.2	23	697	228	469	118	150	73	50	177	216
N1218315401	IUS 154 1840 4	1839	4	88	24.3	26	690	221	469	118	150	73	50	177	216
N1227415701	IUS 154 2750 7	2742	7	101	25.9	16	632	233	399	118	120	58	50	177	216
N1223415601	IUS 154 2350 6	2348	6	85	24.8	19	634	235	399	118	150	73	50	177	216
N1219515501	IUS 154 1960 5	1953	5	82	23.1	23	627	228	399	118	150	73	50	177	216
N1215515401	IUS 154 1560 4	1559	4	80	20.6	26	620	221	399	118	150	73	50	177	216
N1225615701	IUS 154 2570 7	2567	7	88	24.3	16	607	233	374	118	120	58	50	177	216
N1221915601	IUS 154 2200 6	2198	6	82	23.2	19	609	235	374	118	150	73	50	177	216
N1218215501	IUS 154 1830 5	1828	5	79	21.6	23	602	228	374	118	150	73	50	177	216
N1214515401	IUS 154 1460 4	1459	4	77	19.3	26	595	221	374	118	150	73	50	177	216
N1221815701	IUS 154 2190 7	2182	7	80	20.6	16	551	232	319	118	120	58	50	177	216
N1218615601	IUS 154 1870 6	1868	6	75	19.7	19	553	234	319	118	150	73	50	177	216
N1215515501	IUS 154 1560 5	1553	5	73	18.3	23	546	227	319	118	150	73	50	177	216
N1212315401	IUS 154 1240 4	1239	4	71	16.3	26	539	220	319	118	150	73	50	177	216
N1220415701	IUS 154 2050 7	2042	7	77	19.3	16	531	252	279	138	120	58	50	177	216
N1217415601	IUS 154 1750 6	1748	6	72	18.5	19	533	254	279	138	150	73	50	177	216
N1214515501	IUS 154 1460 5	1453	5	70	17.2	23	526	247	279	138	150	73	50	177	216
N1211515401	IUS 154 1160 4	1159	4	68	15.3	26	519	240	279	138	150	73	50	177	216

Max pressure = 200 bar

HEAVY DUTY
IU 154 - IUS 154

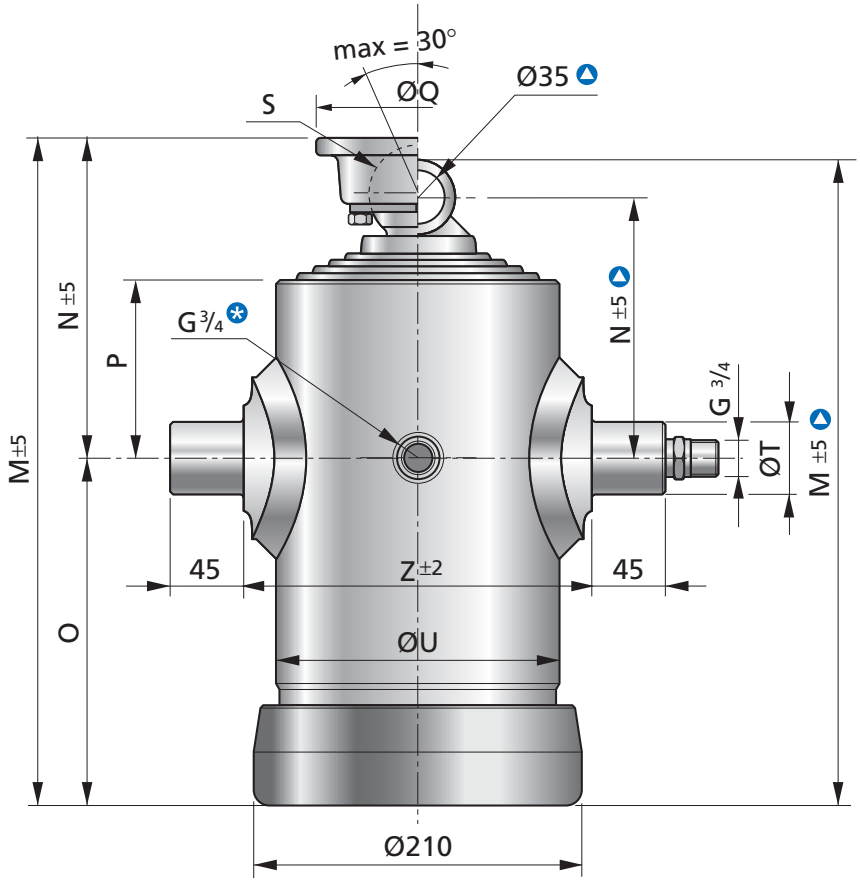

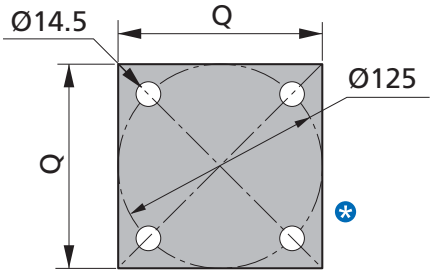

IU 154 - IUS 154

Tipo Type	Sfilate Extensions	Diametro Diameter							
		I	II	III	IV	V	VI	VII	VIII
IU 154	6	154	135	116	98	79	61		
	5	154	135	116	98	79			
	4	154	135	116	98				
IUS 154	8	154	135	120	105	90	75	60	
	7	154	135	120	105	90	75	60	
	6	154	135	120	105	90	75		
	5	154	135	120	105	90			
	4	154	135	120	105				

ACCESSORI - ACCESSORIES

Supporto cilindro
Cylinder support

Supporto bilanciere
Cradle support

Bilanciere
Cradle

● **Vedi pagine 34 e 35 per dettagli**
See pages 34-35 for details

PULL-OUT

La quota indicata con **N** (centro mozzi/centro snodo) si intende a cilindro completamente chiuso.
Si raccomanda di prevedere un pull-out di 20-25 mm, per evitare carichi indesiderati sugli anelli interni di fermo del cilindro in condizione di pieno carico.

*Dimension marked as **N** (closed centre dimension) refers to cylinder completely closed. It is recommended to fit the cylinder with 20-25 mm pull-out more than the specified **N** dimension, in order to avoid unwanted loads on internal steel stop rings when tipper body is fully loaded.*

DETTAGLI TECNICI - TECHNICAL DATA

Codice Code	Modello Model	Corsa Utile Power Stroke (mm)	N° Sfili Extensions N°	Peso Weight (Kg)	Consumo Olio Oil Consumption (dm^3)	Mas. Tot Ribaltabile Total Mass Tip-Up (ton)	M	N	O	P	Q	S	T	U	Z
							(mm)								
N1217415603	**IUS 154 1750 6**	1748	6	71	18.5	19	524	245	279	138	120	58	50	177	216
N1214515503	**IUS 154 1460 5**	1453	5	69	17.2	23	517	238	279	138	120	58	50	177	216
N1211515403	**IUS 154 1160 4**	1159	4	67	15.3	26	510	231	279	138	120	58	50	177	216
N1218115701	**IUS 154 1820 7**	1814	7	72	17.6	16	479	215	264	138	120	58	50	177	216
N1215715601	**IUS 154 1580 6**	1573	6	69	16.9	19	488	224	264	138	150	73	50	177	216
N1213215501	**IUS 154 1330 5**	1324	5	67	15.8	23	488	224	264	138	150	73	50	177	216
N1210615401	**IUS 154 1070 4**	1069	4	66	14.2	26	488	224	264	138	150	73	50	177	216
N1216815701	**IUS 154 1690 7**	1684	7	67	16.2	16	452	243	209	153	120	58	50	177	216
N1214515601	**IUS 154 1460 6**	1455	6	64	15.6	19	459	250	209	153	150	73	50	177	216
N1212215501	**IUS 154 1230 5**	1221	5	63	14.5	23	457	248	209	153	150	73	50	177	216
N1209815401	**IUS 154 0990 4**	982	4	62	13.0	26	455	246	209	153	150	73	50	177	216
N1214515603	**IUS 154 1460 6**	1455	6	64	15.6	23	450	241	209	153	120	58	50	177	216
N1214215701	**IUS 154 1430 7**	1423	7	62	13.9	16	409	233	176	153	120	58	50	177	216
N1212315601	**IUS 154 1240 6**	1237	6	60	13.3	19	418	242	176	153	150	73	50	177	216
N1210415501	**IUS 154 1050 5**	1044	5	59	12.5	23	418	242	176	153	150	73	50	177	216
N1208415401	**IUS 154 0850 4**	844	4	58	11.2	26	418	242	176	153	150	73	50	177	216
N1212615701	**IUS 154 1270 7**	1262	7	58	12.2	16	376	193	183	118	120	58	50	177	216
N1210915601	**IUS 154 1100 6**	1096	6	56	11.7	19	385	202	183	118	150	73	50	177	216
N1209215501	**IUS 154 0930 5**	923	5	55	11.0	23	385	202	183	118	150	73	50	177	216
N1207415401	**IUS 154 0750 4**	743	4	54	9.8	26	385	202	183	118	150	73	50	177	216
N1210515701	**IUS 154 1060 7**	1059	7	52	10.3	16	344	190	154	118	120	58	50	177	216
N1209215601	**IUS 154 0930 6**	922	6	47	9.9	19	344	190	154	118	120	58	50	177	216
✱ **N1209815801**	**IUS 154 0990 8**	984	8	39	8.8	13	279	165	114	110	125	43	50	177	216
✱ **N1208815701**	**IUS 154 0890 7**	881	7	40	8.6	16	279	165	114	110	125	43	50	177	216
Max pressure = 200 bar															

HEAVY DUTY
IU 135 - IUS 135

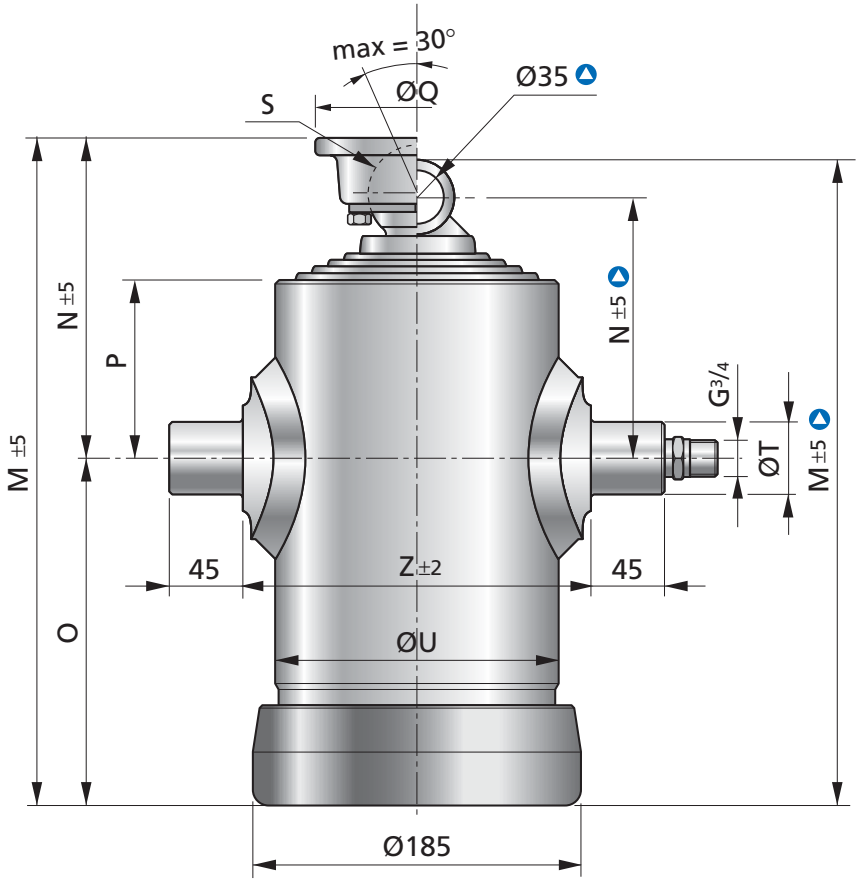

IU 135 - IUS 135

Tipo Type	Sfilate Extensions	Diametro Diameter						
		I	II	III	IV	V	VI	VII
IU 135	5	135	116	98	79	61		
	4	135	116	98	79			
	3	135	116	98				
IUS 135	7	135	120	105	90	75	60	45
	6	135	120	105	90	75	60	
	5	135	120	105	90	75		
	4	135	120	105	90			

ACCESSORI - ACCESSORIES

Supporto cilindro
Cylinder support

Supporto bilanciere
Cradle support

Bilanciere
Cradle

● **Vedi pagine 34 e 35 per dettagli**
See pages 34-35 for details

PULL-OUT

La quota indicata con **N** (centro mozzi/centro snodo) si intende a cilindro completamente chiuso.
Si raccomanda di prevedere un pull-out di 20-25 mm, per evitare carichi indesiderati sugli anelli interni di fermo del cilindro in condizione di pieno carico.

*Dimension marked as **N** (closed centre dimension) refers to cylinder completely closed. It is recommended to fit the cylinder with 20-25 mm pull-out more than the specified **N** dimension, in order to avoid unwanted loads on internal steel stop rings when tipper body is fully loaded.*

DETTAGLI TECNICI - TECHNICAL DATA

Codice Code	Modello Model	Corsa Utile Power Stroke (mm)	N° Sfili Extensions N°	Peso Weight (Kg)	Consumo Olio Oil Consumption (dm3)	Mas. Tot Ribaltabile Total Mass Tip-Up (ton)	M	N	O	P	Q	S	T	U	Z
							(mm)								
N1131813501	IU 135 3190 5	3183	5	106	25.6	14	880	227	653	117	150	73	50	157	192
N1125413401	IU 135 2550 4	2546	4	94	23.8	18	873	220	653	117	150	73	50	157	192
N1119013301	IU 135 1910 3	1909	3	85	20.6	21	866	213	653	117	150	73	50	157	192
N1131813503	IU 135 3190 5	3183	5	106	25.6	14	896	216	653	117			50	157	192
N1125413403	IU 135 2550 4	2546	4	94	23.8	18	871	190	653	117			50	157	192
N1127813501	IU 135 2790 5	2783	5	95	22.4	14	800	227	573	117	150	73	50	157	192
N1122213401	IU 135 2230 4	2226	4	86	20.8	18	793	220	573	117	150	73	50	157	192
N1127813503	IU 135 2790 5	2783	5	95	22.4	14	816	216	573	117			50	157	192
N1122213403	IU 135 2230 4	2226	4	86	20.8	18	791	190	573	117			50	157	192
N1227713601	IUS 135 2780 6	2777	6	81	22.1	14	693	226	467	118	120	58	50	157	192
N1223113501	IUS 135 2320 5	2313	5	73	20.8	17	695	228	467	118	150	73	50	157	192
N1218413401	IUS 135 1850 4	1848	4	70	18.8	20	688	221	467	118	150	73	50	157	192
N1223513601	IUS 135 2360 6	2357	6	73	18.8	14	623	226	397	118	120	58	50	157	192
N1219613501	IUS 135 1970 5	1963	5	67	17.6	17	625	228	397	118	150	73	50	157	192
N1215613401	IUS 135 1570 4	1568	4	64	15.9	20	618	221	397	118	150	73	50	157	192
N1222013601	IUS 135 2210 6	2207	6	70	17.6	14	598	226	372	118	120	58	50	157	192
N1218313501	IUS 135 1840 5	1838	5	64	16.5	17	600	228	372	118	150	73	50	157	192
N1214613401	IUS 135 1470 4	1468	4	62	14.9	20	593	221	372	118	150	73	50	157	192
N1218713601	IUS 135 1880 6	1877	6	64	14.9	14	542	225	317	118	120	58	50	157	192
N1215613501	IUS 135 1570 5	1563	5	59	14.0	17	544	227	317	118	150	73	50	157	192
N1212413401	IUS 135 1250 4	1248	4	57	12.7	20	537	220	317	118	150	73	50	157	192
N1217513601	IUS 135 1760 6	1757	6	62	14.0	14	522	250	272	143	120	58	50	157	192
N1214613501	IUS 135 1470 5	1463	5	57	13.1	17	524	252	272	143	150	73	50	157	192
N1211613401	IUS 135 1170 4	1168	4	55	11.8	20	517	245	272	143	150	73	50	157	192
N1214613503	IUS 135 1470 5	1463	5	56	13.1	17	515	243	272	143	120	58	50	157	192
N1211613403	IUS 135 1170 4	1168	4	54	11.8	20	508	236	272	143	120	58	50	157	192
N1215413601	IUS 135 1550 6	1542	6	58	12.5	14	470	218	252	143	120	58	50	157	192
N1213013501	IUS 135 1310 5	1301	5	54	11.8	17	479	227	252	143	150	73	50	157	192
N1210513401	IUS 135 1060 4	1052	4	53	10.7	20	479	227	252	143	150	73	50	157	192
N1214313601	IUS 135 1440 6	1433	6	54	11.6	14	443	233	210	145	120	58	50	157	192

Max pressure = 200 bar

HEAVY DUTY
IU 135 - IUS 135

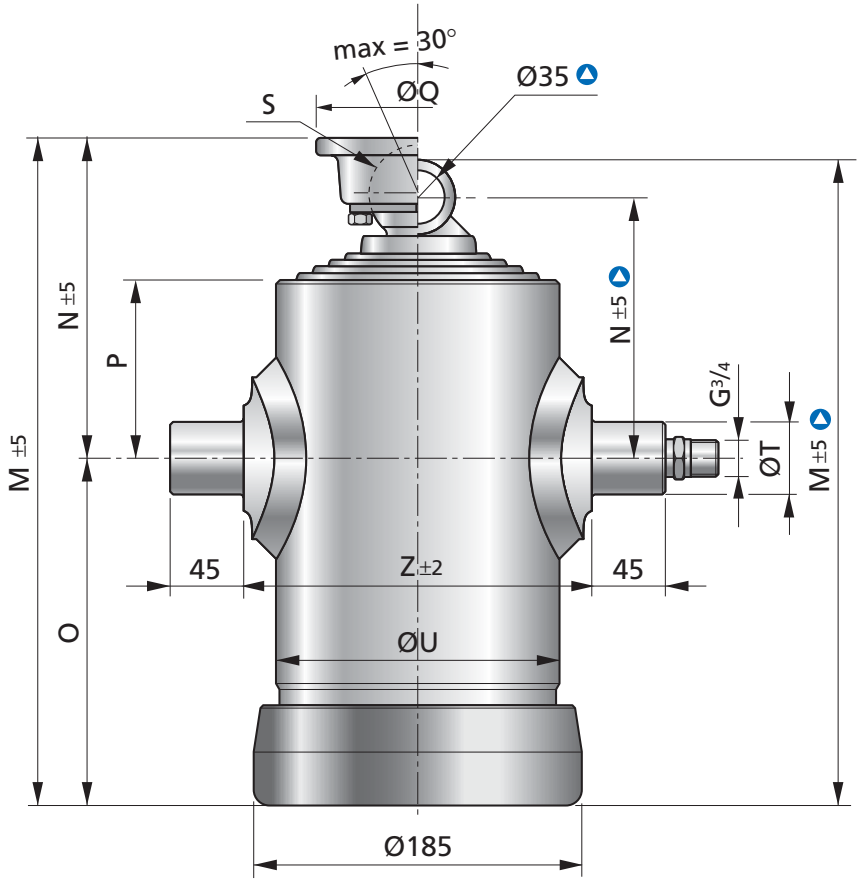

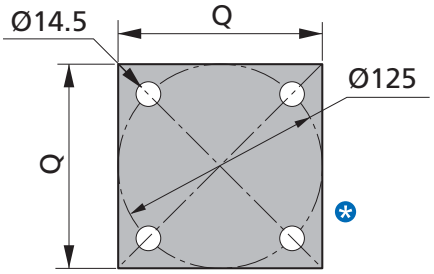

IU 135 - IUS 135

Tipo Type	Sfilate Extensions	Diametro Diameter						
		I	II	III	IV	V	VI	VII
IU 135	5	135	116	98	79	61		
	4	135	116	98	79			
	3	135	116	98				
IUS 135	7	135	120	105	90	75	60	45
	6	135	120	105	90	75	60	
	5	135	120	105	90	75		
	4	135	120	105	90			

ACCESSORI - ACCESSORIES

Supporto cilindro
Cylinder support

Supporto bilanciere
Cradle support

Bilanciere
Cradle

● **Vedi pagine 34 e 35 per dettagli**
See pages 34-35 for details

PULL-OUT

La quota indicata con **N** (centro mozzi/centro snodo) si intende a cilindro completamente chiuso.
Si raccomanda di prevedere un pull-out di 20-25 mm, per evitare carichi indesiderati sugli anelli interni di fermo del cilindro in condizione di pieno carico.

*Dimension marked as **N** (closed centre dimension) refers to cylinder completely closed. It is recommended to fit the cylinder with 20-25 mm pull-out more than the specified **N** dimension, in order to avoid unwanted loads on internal steel stop rings when tipper body is fully loaded.*

DETTAGLI TECNICI - TECHNICAL DATA

Codice Code	Modello Model	Corsa Utile Power Stroke (mm)	N° Sfili Extensions N°	Peso Weight (Kg)	Consumo Olio Oil Consumption (dm^3)	Mas. Tot Ribaltabile Total Mass Tip-Up (ton)	M	N	O	P	Q	S	T	U	Z
							(mm)								
N1212013501	**IUS 135 1210 5**	1204	5	51	10.9	17	450	240	210	145	150	73	50	157	192
N1209713401	**IUS 135 0970 4**	970	4	50	9.9	20	448	238	210	145	150	73	50	157	192
N1212013503	**IUS 135 1210 5**	1204	5	50	10.9	17	441	231	210	145	120	58	50	157	192
N1209713403	**IUS 135 0970 4**	970	4	49	9.9	20	439	229	210	145	120	58	50	157	192
N1212013601	**IUS 135 1210 6**	1203	6	49	9.8	14	400	233	167	153	120	58	50	157	192
N1210113501	**IUS 135 1020 5**	1017	5	47	9.3	17	409	242	167	153	150	73	50	157	192
N1208213401	**IUS 135 0830 4**	824	4	46	8.4	20	409	242	167	153	150	73	50	157	192
N1210113503	**IUS 135 1020 5**	1017	5	46	9.3	17	400	233	167	153	120	58	50	157	192
N1208213403	**IUS 135 0830 4**	824	4	45	8.4	20	400	233	167	153	120	58	50	157	192
N1210713601	**IUS 135 1080 6**	1075	6	46	8.7	14	367	193	174	118	120	58	50	157	192
N1209013501	**IUS 135 0910 5**	909	5	44	8.2	17	376	202	174	118	150	73	50	157	192
N1207313401	**IUS 135 0740 4**	736	4	43	7.5	20	376	202	174	118	150	73	50	157	192
✱ **N1208513704**	**IUS 135 0860 7**	851	7	33	6.3	12	273	160	113	105	125	43	45	157	195
Max pressure = 200 bar															

HEAVY DUTY
IU 116 - IUS 116

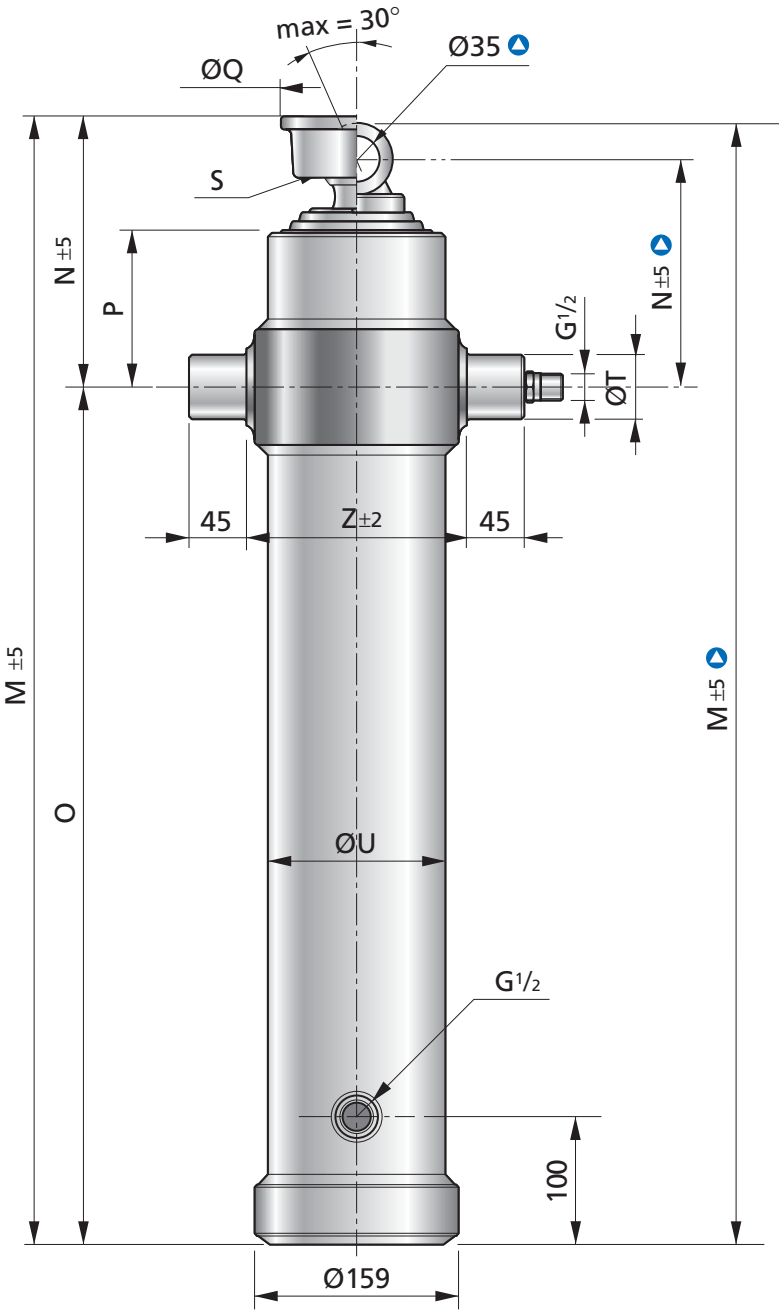

IU 116 - IUS 116

Tipo Type	Sfilate Extensions	Diametro Diameter			
		I	II	III	IV
IU 116	4	116	98	79	61
	3	116	98	79	

ACCESSORI - ACCESSORIES

Supporto cilindro
Cylinder support

Supporto bilanciere
Cradle support

● **Vedi pagine 34 e 35 per dettagli** / *See pages 34-35 for details*

PULL-OUT

La quota indicata con **N** (centro mozzi/centro snodo) si intende a cilindro completamente chiuso.
Si raccomanda di prevedere un pull-out di 20-25 mm, per evitare carichi indesiderati sugli anelli interni di fermo del cilindro in condizione di pieno carico.

*Dimension marked as **N** (closed centre dimension) refers to cylinder completely closed. It is recommended to fit the cylinder with 20-25 mm pull-out more than the specified **N** dimension, in order to avoid unwanted loads on internal steel stop rings when tipper body is fully loaded.*

DETTAGLI TECNICI - TECHNICAL DATA

Codice Code	Modello Model	Corsa Utile Power Stroke (mm)	N° Sfili Extensions N°	Peso Weight (Kg)	Consumo Olio Oil Consumption (dm3)	Mas. Tot Ribaltabile Total Mass Tip-Up (ton)	M	N	O	P	Q	S	T	U	Z
							(mm)								
N1125411401	**IU 116 2550 4**	2548	4	84	16.5	12	879	211	668	117	120	58	50	138	171
N1119111301	**IU 116 1920 3**	1911	3	73	14.7	15	872	204	668	117	120	58	50	138	171
▲ **N1125411403**	**IU 116 2550 4**	2548	4	84	16.5	12	904	209	668	117			50	138	171
▲ **N1119111303**	**IU 116 1920 3**	1911	3	73	14.7	15	879	183	668	117			50	138	171
N1122211401	**IU 116 2230 4**	2228	4	75	14.4	12	799	211	588	117	120	58	50	138	171
N1116711301	**IU 116 1680 3**	1671	3	65	12.8	15	792	204	588	117	120	58	50	138	171
▲ **N1122211403**	**IU 116 2230 4**	2228	4	75	14.4	12	824	209	588	117			50	138	171
▲ **N1116711303**	**IU 116 1680 3**	1671	3	65	12.8	15	799	183	588	117			50	138	171
Max pressure = 200 bar															

HEAVY DUTY

IUL 174 - IUL 154 - IUL 135

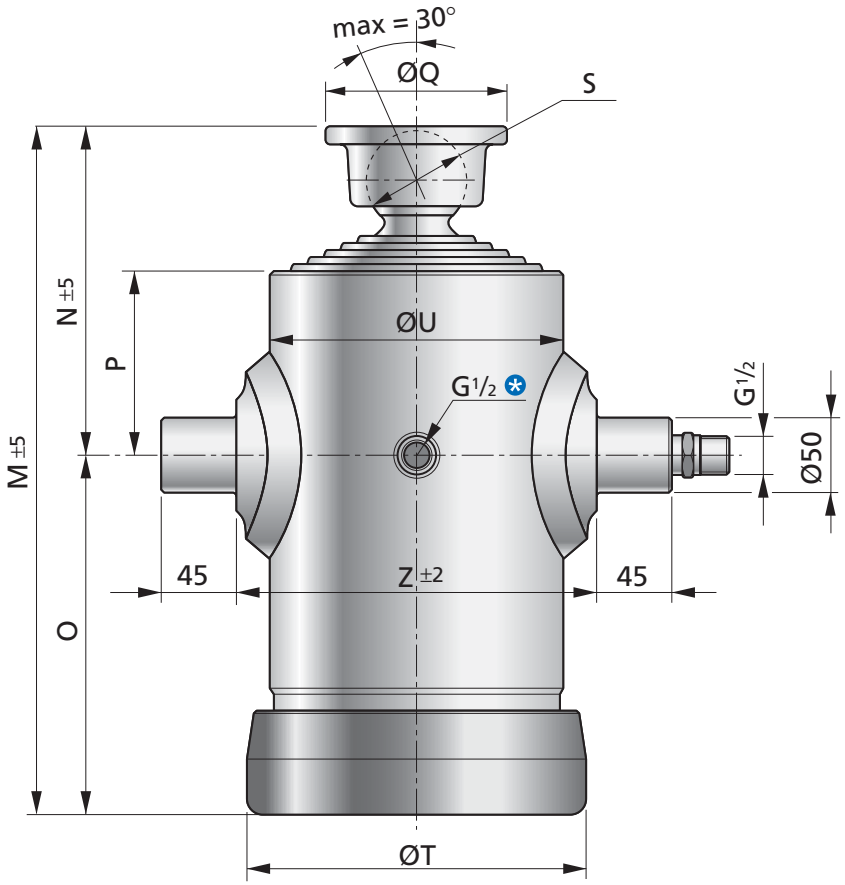

IUL 174 - IUL 154 - IUL 135

Tipo Type	Sfilate Extensions	Diametro Diameter							
		I	II	III	IV	V	VI	VII	VIII
IUL 174	8	174	154	135	120	105	90	75	60
	7	174	154	135	120	105	90	75	
	6	174	154	135	120	105	90		
IUL 154	7	154	135	120	105	90	75	60	
	6	154	135	120	105	90	75		
	5	154	135	120	105	90			
	4	154	135	120	105				
IUL 135	6	135	120	105	90	75	60		
	5	135	120	105	90	75			
	4	135	120	105	90				

ACCESSORI - ACCESSORIES

Supporto cilindro
Cylinder support

Supporto bilanciere
Cradle support

Bilanciere
Cradle

● **Vedi pagine 34 e 35 per dettagli**
See pages 34-35 for details

PULL-OUT

La quota indicata con **N** (centro mozzi/centro snodo) si intende a cilindro completamente chiuso.
Si raccomanda di prevedere un pull-out di 20-25 mm, per evitare carichi indesiderati sugli anelli interni di fermo del cilindro in condizione di pieno carico.

*Dimension marked as **N** (closed centre dimension) refers to cylinder completely closed. It is recommended to fit the cylinder with 20-25 mm pull-out more than the specified **N** dimension, in order to avoid unwanted loads on internal steel stop rings when tipper body is fully loaded.*

DETTAGLI TECNICI - TECHNICAL DATA

Codice Code	Modello Model	Corsa Utile Power Stroke (mm)	N° Sfili Extensions N°	Peso Weight (Kg)	Consumo Olio Oil Consumption (dm3)	Mas. Tot Ribaltabile Total Mass Tip-Up (ton)	M	N	O	P	Q	S	T	U	Z
							(mm)								
N1318217801	IUL 174 1820 8	1820	8	77	20.9	19	424	219	205	145	120	58	230	198	238
N1316017701	IUL 174 1610 7	1608	7	70	20.3	22	424	219	205	145	120	58	230	198	238
N1313817601	IUL 174 1390 6	1389	6	71	19.3	26	424	219	205	145	120	58	230	198	238
N1322015701	IUL 154 2210 7	2209	7	73	20,7	16	532	260	272	145	120	58	210	177	216
N1318815601	IUL 154 1890 6	1887	6	66	19,8	19	525	253	272	145	120	58	210	177	216
N1315615501	IUL 154 1570 5	1565	5	62	18,4	23	518	246	272	145	120	58	210	177	216
N1312415401	IUL 154 1250 4	1243	4	63	16,3	26	511	239	272	145	120	58	210	177	216
N1315815701	IUL 154 1590 7	1582	7	61	15,2	16	419	219	200	145	120	58	210	177	216
N1313715601	IUL 154 1370 6	1370	6	60	14,6	19	419	219	200	145	120	58	210	177	216
N1311515501	IUL 154 1160 5	1151	5	52	13,6	23	419	219	200	145	120	58	210	177	216
N1319013601	IUL 135 1910 6	1908	6	58	15,1	14	523	248	275	140	120	58	185	158	192
N1315813501	IUL 135 1590 5	1586	5	52	14,2	17	516	241	275	140	120	58	185	158	192
N1312613401	IUL 135 1270 4	1264	4	47	12,8	20	509	234	275	140	120	58	185	158	192
N1313513601	IUL 135 1360 6	1351	6	46	10,9	14	410	242	168	170	120	58	185	158	192
N1311313501	IUL 135 1140 5	1139	5	49	10,3	17	410	242	168	170	120	58	185	158	192
N1309213401	IUL 135 0920 4	920	4	42	9,3	20	410	242	168	170	120	58	185	158	192
* N1311813601	IUL 135 1190 6	1187	6	44	9,6	14	383	204	179	130	120	58	185	158	192
* N1310013501	IUL 135 1010 5	1002	5	45	9,1	17	383	204	179	130	120	58	185	158	192
* N1308113401	IUL 135 0810 4	810	4	37	8,2	20	383	204	179	130	120	58	185	158	192

Max pressure = 200 bar

ACCESSORI - ACCESSORIES

SUPPORTO CILINDRO - CYLINDER SUPPORT

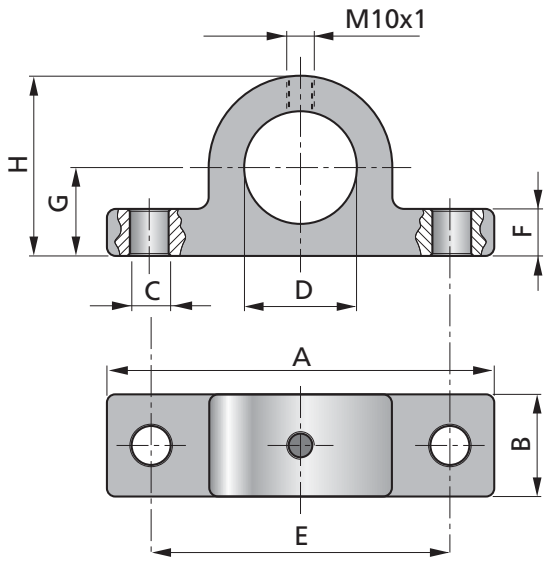

ISC 45 - ISC 50 - ISC 55 - ISC 70

Codice Code	Modello Model	A	B	C	D	E	F	G	H	Peso Weight
		(mm)								(Kg)
NSA70045001	ISC45	140	40	14	45,5	108	17	32	65	1,5
NSA70050001	ISC50	150	45	15	50,5	113	15	45	80	2,6
NSA70055001	ISC55	150	45	15	55,5	113	15	45	80	2,6
NSA70070001	ISC70	180	45	16,5	70,5	140	15	47,5	95	3

SUPPORTO BILANCIERE - CRADLE SUPPORT

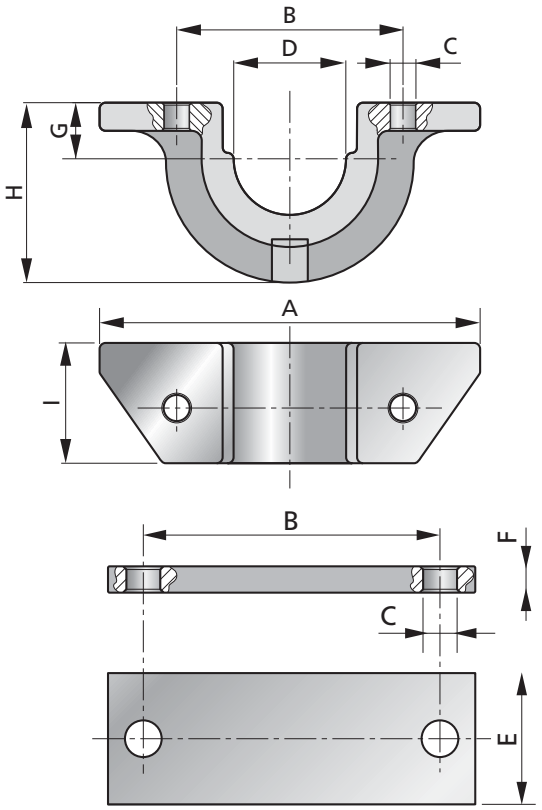

ISB 45 • ISB 50 • ISB 55 • ISB 70

Codice Code	Modello Model	A	B	C	D	E	F	G	H	I	Peso Weight
		(mm)									(Kg)
NSA60045001	ISB45	145	113	13	45,5	30	8	23	56	40	1
NSA60050001	ISB50	190	113	13	51	30	8	25,5	70	45	2
NSA60055001	ISB55	190	113	13	56	30	8	28	70	45	2
NSA60070001	ISB70	210	148	13	71	30	8	35,5	150	45	3

SUPPORTO CILINDRI - CYLINDER SUPPORT

IC279 • IC249 • IC222 • IC196 • IC174 • IC154 • IC135

Codice Code	Modello Model	Portata Max Max Capacity	A	B	C	D	E	F	G	H	I	J	K	L	Peso Weight
			(mm)												(Kg)
NSA53000001	IC279	50	535	480	70	70	422	90	170	205	362	20	0	625	68
NSA52000001	IC249	50	535	480	70	70	402	90	170	205	342	20	0	625	68
NSA51000001	IC222	30	455	410	55	55	372	72,5	134,5	147,5	312	15	0	545	33
NSA50100001	IC196	27	400	355	50	50	320	65	120	145	270	15	0	490	25
NSA50200001	IC174	26	400	355	50	50	290	65	120	145	240	15	0	490	24
NSA50300001	IC154	21	3330	291	50	50	266	45	95	130	218	12	0	420	16
NSA50400001	IC135	17	300	261	50	50	242	45	90	120	194	12	0	390	13

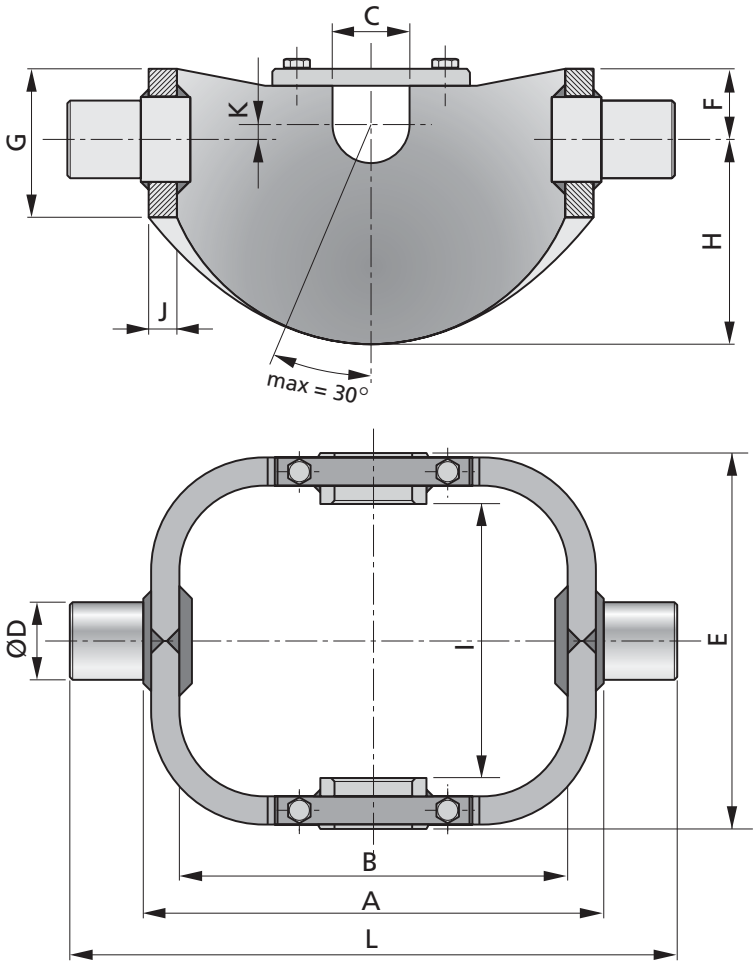

COMPLESSIVO - ASSEMBLY

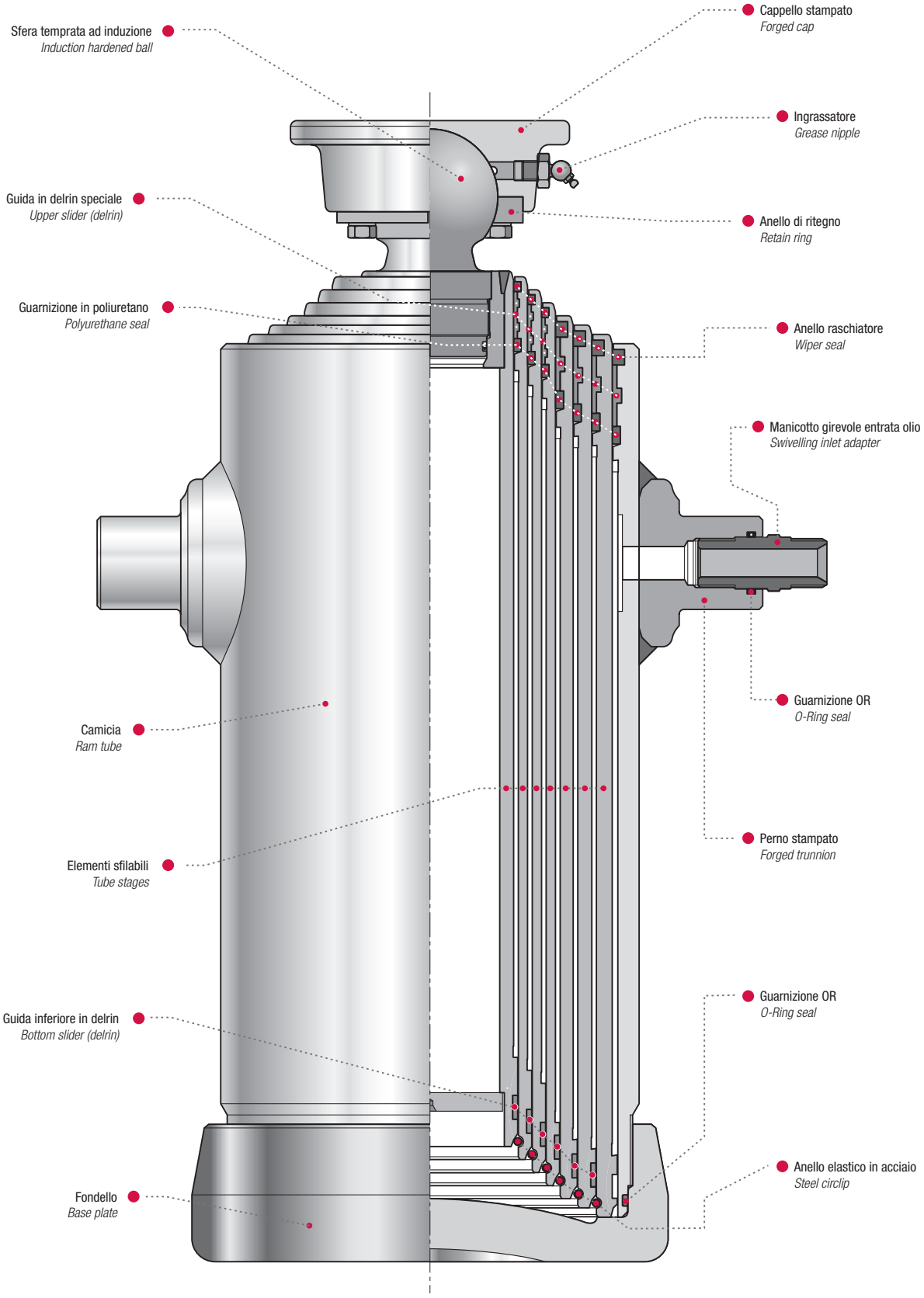

AVVERTENZE - WARNINGS

Il presente catalogo sottopone alla Spettabile Clientela la gamma ompleta dei cilindri idraulici telescopici per ribaltabili di produzione della IPH. Tutti i cilindri sono componenti che possono essere incorporati in macchine che devono rispettare i requisiti essenziali di sicurezza della Direttiva Macchine 2006/42 CE e successive modifiche. Si presuppone che la macchina in cui sarà incorporato sia conforme a tali direttive e che rispetti le condizioni d'uso.
Condizioni d'uso. L'esercizio ordinario del cilindro telescopico prevede che esso venga utilizzato per sollevare cassoni di veicoli per il ribaltamento progressivo su tutta la lunghezza della corsa del materiale ivi contenuto nel rispetto delle condizioni di uso. La massa del cassone più la massa del materiale contenuto danno la massa totale ribaltabile, i cui valori riportati sono indicativi delle prestazioni che si possono ottenere nello scaricamento in condizioni normali Il cilindro è stato dimensionato per sostenere sforzi diretti lungo il suo asse, non deve perciò essere assoggettato a carichi diversi da quelli previsti (per esempio carichi laterali).

Sono elencati alcuni accorgimenti essenziali per un corretto montaggio del cilindro:
1) Nell'operazione di montaggio proteggere il cilindro dalle gocce di saldatura o da altri corpi estranei;
2) Nell'impianto applicare la valvola di massima pressione;
3) Curare bene l'impianto con l'applicazione di adeguati filtri, con la massima pulizia del serbatoio e delle tubazioni e l'uso di olii di qualità per impianti oleodinamici;
4) Montare sempre un dispositivo di fine corsa, lasciando al cilindro circa il 5% della corsa non utilizzato;
5) Il cassone in posizione di riposo non deve essere appoggiato sul cilindro.

This catalogue lists the whole range of IPH under-body hoists for tippers, standard type. Cylinders should be integrated into machines manufactured according to the safety requirements and technical provisions specified by the European Community, Machinery Directive nr. 2006/42 CE, and subsequent modifications.
The machinery must comply with the previously mentioned Directive and relevant operating conditions.
Fitment suggestions and operating conditions. The normal application of multistage cylinder is to lift up tipping bodies, loaded with different materials, and consequently discharge this material whilst the cylinder is extended all along its stroke. The body weight plus the payload are the total lifting weight that must be raised by the cylinder. This value, calculated at the working pressure, is a rough indication of the tipping power of the cylinder. The cylinders have been sized for loads along the longitudinal axis (e.g. no side load is admitted).

A few hints for correct fitment of the cylinder:
1) Protect the top of the cylinder from welding spatter, or other foreign particles;
2) Always fit a relief valve in the hydraulic pressure line. The relief valve must be set at a pressure lower than the max admitted for the cylinder (see specification for each cylinder);
3) Fit a filter in the hydraulic line, flush the oil tank and pipes, use good quality hydraulic oil;
4) Always fit an end-of-stroke device and leave a part of the stroke unused (recommended value 5% of the total stroke);
5) The tipper body should not rest on the cylinder. The cylinder should be extended at least 30 mm (when the tipper body is fully loaded).

• Il presente catalogo annulla e sostituisce i precedenti
IPH si riserva il diritto di apportare modifiche migliorative senza preavviso.
È vietata la riproduzione anche parziale.

• *This catalogue cancels and replaces the previous ones.*
IPH reserves the right to make any improving changes without notice.
All right reserved.

INTERPUMP HYDRAULICS S.p.A.
Via Leonardo da Vinci, 17/1
41015 Nonantola (MO) - Italy

Phone +39 059 896111
Fax +39 059 896201
E-mail: info@interpumphydraulics.com

A MEMBER OF INTERPUMP GROUP